Design and Construction Standards for Wastewater Collection Systems

Southern Nevada - 2009

3rd Edition

Clark County Water Reclamation District

The "Clean WaterTeam"

Boulder City, Nevada — Home of Hoover Dam

The City of Henderson

City of Las Vegas, Nevada

City of North Las Vegas — Your Community of Choice

THIS PAGE LEFT BLANK INTENTIONALLY

DESIGN AND CONSTRUCTION STANDARDS

FOR WASTEWATER COLLECTION SYSTEMS

2009

******Participating Agencies******

CLARK COUNTY WATER RECLAMATION DISTRICT
5857 East Flamingo Road
Las Vegas, Nevada 89122
(702) 668-8160 (Engineering Counter)
(702) 668-8205 (Inspections)

CITY OF BOULDER CITY
401 California Avenue
Boulder City, Nevada 89005
(702) 293-9282

CITY OF HENDERSON
240 Water Street
Henderson, Nevada 89015
(702) 267-3670

CITY OF LAS VEGAS
400 Stewart Avenue
Las Vegas, Nevada 89101
(702) 229-6276

CITY OF NORTH LAS VEGAS
2829 Fort Sumter Drive
North Las Vegas, Nevada 89030
(702) 633-1275

THIS PAGE LEFT BLANK INTENTIONALLY

F O R W A R D

Publication of these Design and Construction Standards for Wastewater Collection Systems is the third edition of this important document and shall supersede any former editions or any of the former individual editions published by the participating agencies.

Special provisions and drawings shall be provided, when necessary, to supplement or modify these standard specifications.

The Design and Construction Standards for Wastewater Collection Systems may be revised by issuance of a supplement to correct errors and omissions found in these specifications and to reflect advanced thinking and the changing technology of the construction industry. Each supplement shall supersede any previous supplement by inclusion of all pertinent portions.

To implement this end, a Specifications committee, including a representative of each of the participating agencies, has been organized to continually study and recommend changes to the standard specifications. Interested parties may address suggested changes and questions to the Committee for Design and Construction Standards for Wastewater Collection Systems, c/o any of the participating agencies listed on the cover of this publication.

The following participating agencies of the Clark County, Nevada area have adopted these specifications by Resolution of their governing bodies as follows:

CLARK COUNTY WATER RECLAMATION DISTRICT
Adopted by Board of Trustees November 3, 2009

CITY OF BOULDER CITY
Adopted by Resolution

CITY OF HENDERSON
Adopted by Resolution

CITY OF LAS VEGAS
Adopted by Resolution

CITY OF NORTH LAS VEGAS
Adopted by the Director of Utilities
in accordance with the City of North
Las Vegas Municipal Code 13.04.140

THIS PAGE LEFT BLANK INTENTIONALLY

DESIGN AND CONSTRUCTION STANDARDS

TABLE OF CONTENTS

SECTION	ITEM
1	GENERAL INFORMATION
2	DESIGN STANDARDS
3	CONSTRUCTION STANDARDS
4	CONTROL OF MATERIALS
5	STANDARD DRAWINGS
6	TABLES
7	INDEX

THIS PAGE LEFT BLANK INTENTIONALLY

DESIGN AND CONSTRUCTION STANDARDS

SECTION 1

GENERAL INFORMATION

TABLE OF CONTENTS

GENERAL INFORMATION

SECTION 1

Section	Description	Page No.
1.1	General Statement	1-1
1.2	Definitions	1-2
1.2.1	Participating Agency or Agency	1-2
1.2.2	Developer	1-2
1.2.3	Contractor	1-2
1.2.4	Director	1-2
1.2.5	Engineer	1-3
1.2.6	Agency's Representative	1-3
1.2.7	Equivalent Residential Unit (ERU)	1-3
1.2.8	Outlying Service Areas	1-3
1.2.9	Public Interceptor Sewer and Public Collector Sewer	1-3
1.2.10	Private Collector Sewer	1-3
1.2.11	Lateral	1-4
1.2.12	Design and Construction Standards	1-4
1.2.13	Construction Documents / Contract Documents	1-4
1.2.14	Construction Drawings	1-4
1.2.15	Project	1-4
1.2.16	Unpaved Area	1-4
1.2.17	Handheld Compaction Equipment	1-4
1.2.18	Pump Station / Lift Station	1-5
1.3	Abbreviations	1-5
1.4	Reference to Standards and Publications	1-5
1.5	Right-of-Ways and Easements	1-6
1.6	Locations of Existing Utilities and Site Objects	1-7
1.7	Working Hours	1-8
1.8	Inspection	1-8
1.8.1	Duties of Agency's Representative	1-8
1.8.2	Inspection of Work	1-9
1.8.3	Scheduling of Inspection	1-10
1.8.4	Inspection Task Overview	1-10
	Job Start / Pre-Inspection	1-10
	Earthwork, Section 3.13	1-11
	Pipe Installations, Section 3.14	1-12
	Manhole Construction and Installation, Section 3.16	1-13
	Lateral Sewer Connections, Section 3.17	1-14

	Abandonment of Existing Facilities, Section 3.18	1-14
	Testing, Section 3.19	1-14
	Initial Acceptance	1-15
	Final Acceptance	1-16
1.9	Indemnity	1-17
1.10	Guarantee	1-17
1.11	Violations	1-17
1.12	Time Limitation	1-17
1.13	Standard Drawings	1-18
1.14	Rules and Regulations	1-18
1.15	Approved Materials	1-18
1.16	Pretreatment Requirements	1-18

THIS PAGE LEFT BLANK INTENTIONALLY

SECTION 1

GENERAL INFORMATION

1.1 GENERAL STATEMENT

The Clark County Water Reclamation District and the Cities of Boulder City, Henderson, Las Vegas and North Las Vegas are governmental subdivisions of the State of Nevada that provide sanitary sewer service pursuant to the provisions of NRS 265, 266, 267, 318 and other applicable State requirements. The Design and Construction Standards for Wastewater Collection Systems presented herein have been adopted by the governing bodies of each of the Participating Agencies and represent the minimum design and construction criteria for sanitary sewer systems within the jurisdiction of each of the Participating Agencies. The Contractor shall have a copy of these specifications onsite at all times during construction.

Except as expressly set forth in these Design and Construction Standards, the Developer or the Contractor shall select the means, methods and sequences for constructing facilities in accordance with these Standards. The Participating Agency will not participate in selection of the means, methods and sequences of construction. Where particular means, methods or sequences are expressly required by the Design and Construction Standards, such requirements are only for the purpose of obtaining the desired results. Contractor may suggest alternative means, methods and sequences of construction that Contractor believes will achieve the required results; however the Participating Agency shall not be obligated to accept these alternative means, methods or sequences of construction.

Except as expressly set forth in a written agreement approved by the governing body for the Participating Agency, the Developer or the Contractor shall pay all costs of constructing facilities in accordance with these Design and Construction Standards. Except as expressly set forth in a written agreement approved by the Participating Agency's governing body, the Participating Agency assumes no liability for and does not agree to pay any costs of constructing facilities. No statements, actions or omissions of any officer, employee or agent of the Participating Agency may be construed as an assumption of liability for or an agreement to pay any costs of constructing facilities. The Participating Agency's governing body has not delegated any officer, employee or agent of the respective Agency nor to any other person any authority to assume liability for or agree to pay costs of constructing facilities.

Generally, these Design and Construction Standards shall apply to sanitary sewers 15-inches in diameter and smaller. Application of these Design and Construction Standards to larger sewers shall be at the Agency’s sole discretion. These Design and Construction Standards shall apply to all sanitary sewer improvements constructed within public right-of-ways or public easements; and, shall also generally apply to private sewers and laterals constructed on private property as hereinafter specified. The Uniform Plumbing Code, latest edition, shall also apply to the construction of private sewers and laterals on private property. Any conflicts between the requirements of these Design and Construction Standards and the Uniform Plumbing Code shall be resolved in accordance with the provisions of Section 1.4.

1.2 DEFINITIONS

1.2.1 Participating Agency or Agency:

The governmental entity having jurisdiction over the sanitary sewer service area in which the Project described in the Construction Documents is being constructed, which is one of the following:

The Clark County Water Reclamation District, located at
5857 East Flamingo Road
Las Vegas, Nevada 89122
(702) 668-8160.

The City of Boulder City, located at
401 California Avenue
Boulder City, Nevada 89005
(702) 293-9282.

The City of Henderson, located at
240 Water Street
Henderson, Nevada 89015
(702) 565-2103.

The City of Las Vegas, located at
400 East Stewart Avenue
Las Vegas, Nevada 89101
(702) 229-6276.

The City of North Las Vegas, located at
2829 Fort Sumter Drive
North Las Vegas, Nevada 89030
(702) 633-1275.

1.2.2 Developer:

The individual, corporation, public Agency or partnership that requires sanitary sewer service, either by the installation of a lateral or by constructing a sewer main extension for a proposed or existing structure or structures. The term “Developer” shall also include individuals or groups transitioning from private septic systems to public sanitary sewer service if so designated by the Agency.

1.2.3 Contractor:

The construction company licensed by the Nevada State Contractor Board that has been engaged by the Developer to install the Developer's Project sanitary sewer improvements depicted in the Construction Documents prepared by the Engineer.

1.2.4 Director:

The Director of the Agency or his/her duly authorized Representative.

1.2.5 Engineer:

The consulting engineer, registered in the State of Nevada, who has been engaged by a Developer, Agency or Contractor to prepare the Construction Documents for the Project.

1.2.6 Agency's Representative:

The person designated by the Director to represent the Agency and includes the inspection staff operating as an extension of the Agency's staff assigned to Developer's Project.

1.2.7 Equivalent Residential Unit (ERU):

Equivalent Residential Unit (ERU) is the average amount of wastewater which a single-family residence discharges into the system. An ERU is equivalent to 90,000 gallons of wastewater discharged per year.

1.2.8 Outlying Service Areas:

All communities and regions outside the Las Vegas Valley, including but not limited to, Laughlin, Overton, Moapa Valley, Searchlight, Blue Diamond, Coyote Springs, Indian Springs and other areas so designated by the Agency.

1.2.9 Public Interceptor Sewer and Public Collector Sewer:

The terms 'public interceptor sewer' and 'public collector sewer' (also called 'public main sewer') shall refer to those pipelines, including manholes and other appurtenances, publicly owned and installed in dedicated easements or right-of-ways designed to receive and convey tributary sanitary wastewater flows from one or more private collector mains and/or service laterals. Public interceptor sewers are generally intended to serve large geographic areas and receive flows from multiple developments and both public and private collector sewers. Public collector sewers are intended to serve individual developments and receive flows from laterals and private collector sewers. Laterals may not be connected to interceptor sewers unless approved by the Agency.

1.2.10 Private Collector Sewer:

The term 'private collector main' (also called 'private main sewer') shall refer to those privately owned pipelines, including manholes and other appurtenances, located in private streets or on private property that are designed to receive tributary sanitary wastewater flows from one or more private collector mains and/or service laterals and convey said wastewater flows to public collector sewers and, where permitted by the Agency, to public interceptor sewers. Single family residential developments are prohibited from containing private collector mains. All collector mains in single family developments shall be public and shall be located in public easements conforming to Section 1.5.

1.2.11 Lateral:

The term lateral shall refer to the privately owned service connection from an individual residential property, individual multi-family building or individual commercial/industrial building to a public collector sewer, a private collector sewer or manhole constructed along such sewers.

1.2.12 Design and Construction Standards:

The term "Design and Construction Standards" or “Standards” as used in this book shall refer to the Design and Construction Standards for Wastewater Collection Systems 2009, or the latest addition thereto.

1.2.13 Construction Documents / Contract Documents:

These Standards and the Construction Drawings, supplemental specifications, calculations, agreements and other documentation approved by the Agency depicting the entire construction work required to complete the Project. Contractor shall perform all construction in general conformance with the Construction Documents without material deviation. If the Contractor finds that changes are required in the Construction Documents to complete the Project in conformance with these Design and Construction Standards, Contractor shall bring these changes to the attention of the Engineer, Developer and Agency. Revised Construction Documents shall be prepared by the Engineer depicting the changes desired and these revised Construction Documents shall be submitted to the Agency for review and approval. The changes shall be in conformance with these Design and Construction Standards.

1.2.14 Construction Drawings:

The drawings included in the Construction Documents prepared by the Developer’s Engineer that depict the sanitary sewer and other improvements to be constructed as part of the Project.

1.2.15 Project:

The complete sanitary sewer system improvements including public interceptor sewers, public collector sewers, private collector sewers, lateral sewers, manholes, pump stations, force mains and related appurtenances presented in the Contract Documents approved by the Agency, and in full conformance with applicable local, State and Federal requirements, that are intended to provide for the collection and conveyance of sanitary wastewater ultimately flowing to the existing main sewer system in the service area under the jurisdiction of the Agency.

1.2.16 Unpaved Area:

Unpaved area is any area that is not currently paved or is not anticipated to be paved as part of the current phase or any future phase of the Project.

1.2.17 Handheld Compaction Equipment:

Compaction equipment that is manually operated for the purpose of achieving a specific compaction result and can be lifted by not more than two workers.

1.2.18 Pump Station / Lift Station

The terms “pump station” and “lift station” may be used interchangeably in these Standards and shall refer to a mechanical pumping station for the conveyance of sanitary wastewater through a dual force main system from a public collector sewer private collector sewer or lateral to a public sanitary interceptor or collector sewer at a higher elevation. Single family residential developments are prohibited from containing private pump stations, private force mains and related appurtenances. All pump stations and force mains in single family developments shall be public and shall be located in public easements conforming to Section 1.5.

1.3 ABBREVIATIONS

ACI	American Concrete Institute
ANSI	American National Standard Institute
ASCE	American Society of Civil Engineers
ASTM	American Society of Testing and Materials
AWS	American Welding Society
AWWA	American Water Works Association
CIP	Cast Iron Pipe
DIP	Ductile Iron Pipe
IQAC	Interagency Quality Assurance Committee
HDPE	High Density Polyethylene
NEMA	National Electric Manufacturers Association
NRCP	Non-Reinforced Concrete Pipe
RCP	Reinforced Concrete Pipe
PVC	Polyvinyl Chloride Pipe
SSPC	Steel Structures Painting Council
UDACS	Uniform Design and Construction Standards for Potable Water Systems
VCP	Vitrified Clay Pipe

1.4 REFERENCE TO STANDARDS AND PUBLICATIONS

Any reference made in these Design Standards or in the approved Construction Documents to any specification, standard, method or publication of any scientific or technical society or other organization shall, in the absence of a specific designation to the contrary, be understood to refer to the specification, standard, method or publication in effect as of the date the work is performed. If the Engineer or Contractor discovers any conflict among these Design Standards, the Construction Documents, and/or the reference standards or other references, the conflict shall be brought to the attention of the Agency prior to proceeding with the Work that is affected by the conflict. The Engineer and/or Contractor, as appropriate to the nature of the conflict, shall submit to the Agency its proposed resolution to the conflict for Agency review. The resolution shall generally be in the manner that provides the greater overall quality, performance and/or service life of the sanitary sewer system improvements being constructed. The Agency shall advise the Engineer and/or Contractor as appropriate of its decisions for resolving the conflict in writing and that resolution shall be considered as a revision to the Construction Documents, and shall apply to the subject Project only.

1.5 RIGHT-OF-WAYS AND EASEMENTS

All public interceptor and collector sewers, manholes, force mains, and appurtenant structures shall be located within dedicated public right-of-ways to the maximum extent practical. Public interceptor sewer, public collector sewers and public force mains may be located in easements granted to the Agency only as a last resort. Public pump stations shall be located in easements granted to the Agency to the maximum extent practical. Public pump stations may be located in public right-of-ways only as a last resort. Public interceptor sewers, public collector sewers, public manholes, public force mains, public pump stations and appurtenant structures may NOT be located in private streets or on private property where there is no easement granted to the Agency. New sanitary sewer systems in single family residential developments, including all sewer mains, pump stations, force mains and related appurtenances except individual building laterals, shall publically owned and shall be located in appropriate easements dedicated to the Agency so that these systems, upon completion of construction and acceptance by the Agency, become part of the Agency-owned sanitary wastewater collection system.

Right-of-ways and easements shall be sufficiently wide to facilitate maintenance of the interceptor sewer, collector sewer, pump station and/or sanitary sewer system appurtenances located in those right-of-ways or easements and shall generally conform to Standard Drawings SD-28A and SD-28B. Where directed by the Agency and in lieu of the gates shown in Standard Drawing SD-28A (Note #3.), bollards conforming to Standard Drawing SD-38 shall be placed across the entrances to easements at the spacing designated by the Agency. Easements shall be on single parcels of property. Easements on separate documents must be recorded before the Construction Documents for a project can be approved by the Agency. The document numbers of all such easements shall be shown on the Construction Documents. Easements done by final map shall be submitted concurrently and tracked with the Construction Documents.

The determination of the required width of a public sewer easement shall be at the sole discretion of the Agency. The Agency reserves the right to require the public sewer easement widths it deems necessary for maintenance of sewer lines, manholes and other sanitary sewer system appurtenances. It is generally intended that the clearance between sanitary sewer components, including sewer pipes, force mains, pump stations and sanitary sewer appurtenances, and other underground utilities in the easement, overhead utilities in the easement, and the easement boundary lines, be at least 1-foot horizontally for each foot of bury depth to invert of sanitary system components. In no case however shall sewer component easements shall be less than the minimum easement widths presented in Table “A” unless otherwise approved by the Agency. Public sewer easements presented in Table “A” shall be increased in width where additional underground utilities are also placed in the easement or if the easement has a longitudinal slope greater than 3-percent. Easement widths shall also be increased as directed by the Agency to provide sufficient clearance from walls, structures and other site improvement objects placed on the property adjacent to the easement for sewer maintenance equipment.

The outside of the public sewer or force main pipe wall shall be a minimum of 10-feet from the easement line and/or other underground utilities in the easement, unless otherwise approved by the Agency. The minimum distance from the outside of the public sewer pipe wall to the easement line or other underground utilities shall be increased by 1-foot for each foot of depth to the invert of the main sewer line greater than 10-feet.

Easements for pump stations shall provide a minimum 20-foot clearance from the outside of any part of the pump station to the easement boundaries. This clearance shall be increased by 1-foot for each foot of depth to the lowest point of the pump station and/or wet well structure for each foot of depth greater than 10 feet. Easement widths shall also be increased as directed by the Agency to also provide sufficient clearance from walls, structures and other site improvement objects placed on the property adjacent to the easement for sewer maintenance equipment.

Through easements having unobstructed access to the public right-of-way at each end are preferred by the Agency for public interceptor sewers and public collector sewers. Upon the approval of the Agency, terminal easements may be provided for public collector sewers only if there is no practical way to provide a through easement. The width of terminal easements longer than 100-feet shall be sufficient to facilitate the turning around of large capacity truck-mounted sewer maintenance equipment having turning radii of not less than 50-feet, unless otherwise approved by the Agency. Easements shall have driving surfaces capable of supporting an H20 vehicle loading under all weather conditions as required by the Agency. The longitudinal slopes of easements are preferred by the Agency to be 3-percent or less, but shall not exceed 5-percent without the approval of the Agency. The transverse slopes of easements shall not exceed 2-percent. Easements shall be graded to facilitate the passage of conventional sewer maintenance vehicles without “high-centering”. The Engineer shall contact the Agency for specific entry slope requirements.

No overhead utilities or overhanging site objects shall be placed in/above public sewer, force main and pump station easements unless otherwise approved by the Agency. If the Engineer has no other option than to place overhead utilities and/or overhanging site objects in the sewer easement, including burying said utilities, the Engineer shall present its justification for placing overhead utilities and/or overhanging site objects in easements to the Agency for consideration. Cost alone shall not be considered as sufficient justification for placing overhead utilities and/or overhanging site objects in easements. The Agency shall review each such situation individually and is under no obligation to approve the placement of overhead utilities and/or overhanging site objects in a public sewer, force main or pump station easement. Where overhead utilities and/or overhanging site objects are permitted by the Agency to be placed in easements, said overhead utilities and/or overhanging site objects shall have a minimum above-ground vertical clearance to the lowest point of the utility or site object everywhere within the easement at least equal to the depth of the deepest underground utility within the easement plus 5-feet, or an above-ground vertical clearance of 20-feet, whichever is greater. Easement widths shall also be increased as necessary for each overhead utility placed in an easement to provide the required horizontal clearance indicated in Table “A”. No permanent landscaping having a mature height of greater than 3-feet shall be placed anywhere in any easement or in the vehicle ingress or egress pathways to easements. No walls, signs, parking area, buildings or other structures may be placed anywhere within any easement or in the vehicle ingress or egress pathways to easements.

1.6 LOCATIONS OF EXISTING UTILITIES AND SITE OBJECTS

The horizontal and vertical locations of existing sewers, other Agency utilities and other utilities/site-objects, if any, shown in Agency records have been obtained from available records which may or may not be accurate. As such, the Agency makes no guarantee, expressed or implied, that the existing sewers, other utilities and/or site objects are in the locations shown in Agency records nor shall the Agency bear any costs whatsoever

associated with redesign or relocation of Project facilities caused directly or indirectly by the differences between the actual locations of existing sanitary sewers, other utilities or site objects and the locations of those sewers/utilities/site-objects depicted in Agency records. Accordingly, the Developer, Engineer and/or Contractor as appropriate shall bear the full risk and responsibility to confirm the locations of the existing sewers or other utilities, if any, to which the Developer will connect its Project facilities or other existing utilities/site objects that may interfere with construction of those facilities.

The Agency shall not waive the requirements of these Design Standards, the reference standards cited in these Design Standards or the approved Construction Documents to accommodate the failure of the Developer, Engineer and/or Contractor to accurately locate existing utilities or other site objects prior to the start of construction.

1.7 WORKING HOURS

Should the Contractor desire to work outside of normal working hours (five days per week, eight hours per day, or as established by the Agency), they may do so by notifying the Agency's Representative in writing in accordance with the notification time requirements set forth in the Agency's standard policy, except in the case of an emergency as determined by the Agency. Where the Agency incurs employee/agent overtime costs as a result of working outside the Agency's normal work hours, the Contractor will be required to pay the overtime inspection fee as established by the Agency for each hour or each portion of each hour thereof including travel to and from Agency offices, with a minimum charge of three hours, for an Agency Representative to be present during the Contractors operations. The Contractor will be required to sign a document which constitutes approval of an overtime inspection fee. The format and wording of this document are presented in Table "B." The Contractor will also be required to pay holiday overtime charges for inspection services provided on Agency approved holidays.

1.8 INSPECTION

1.8.1 Duties of Agency's Representative:

The Contractor shall be solely responsible for the construction means and methods it employs to complete the Project. Neither the Agency nor the Agency Representative shall have authority to control the Contractor's means and methods. However, the Agency Representative shall have the right but not the duty to advise the Contractor if the Agency Representative observes Contractor means and methods being employed that will not likely lead to the Project being completed in accordance with the requirements of the approved Construction Documents.

The Contractor shall be solely responsible for job site safety, including support of partially completed construction; and, for the safe passage of vehicular traffic, pedestrian traffic and construction traffic. Neither the Agency nor the Agency's Representative shall have the authority to enforce the Contractor's sheeting/shoring/bracing designs, job site safety plan or traffic control plan. However, the Agency Representative shall have the right but not the duty to report any conditions to the Contractor he/she observes at the Project site that he/she believes may potentially be unsafe to workers or the general public. Should the Contractor fail to implement corrective actions in a manner that is both appropriate

and timely to the severity of the risk to workers/bystanders, the Agency and/or the Agency Representative shall have the right but not the duty to report such situations to other regulatory agencies as appropriate.

Representatives employed by the Agency will be authorized to inspect all work done and materials furnished. Such inspection may extend to all or any part of the work and to the preparation, fabrication or manufacture of the materials to be used. The Agency's Representative(s) is not authorized to alter or waive the provisions of the Construction Documents. The Agency's Representative(s) is not authorized to issue instructions contrary to the Construction Documents or to act as foreman for the Contractor. The authority to inspect shall not be deemed to impose a duty or responsibility on the part of the Agency to inspect.

The Agency's Representative(s) will, however, have the authority to reject work or materials until any questions at issue can be referred to and decided by the Agency.

Inspection of the work by an authorized Agency Representative shall not be considered as direct control of individual workers and their work. The direct control shall be solely the responsibility of the Contractor's foreman and superintendent.

Inspections are for the sole benefit of the Agency with the goal of attaining extensions and/or improvements to the sanitary system that are in general conformance with the Construction Documents approved by the Agency. Such inspections are not for the benefit of any others nor are they intended to confer rights and/or responsibilities beyond the Agency itself.

1.8.2 Inspection of Work:

The Contractor shall provide the Agency's Representative access to the work at all times that the Contractor, its subcontractors or its other representatives are at the work site for ascertaining whether the work is in accordance with the requirements and intention of these Standards and the Construction Documents.

All materials furnished and all work done under these standards shall be subject to inspection. Work completed without the prescribed inspection may be required to be taken out and replaced with the proper inspection, and the entire cost of removing and replacement, including the cost of all materials taken out, shall be borne by the Contractor, irrespective of whether the work is found to be defective or not.

Work buried without the authority of the Agency's Representative shall, upon order of the Agency's Representative, be uncovered to the extent required, and the Contractor shall bear the entire cost of performing all the work and furnishing all the materials necessary for the removal of the covering and its subsequent replacement as directed and approved by the Agency's Representative.

Failure to detect or reject any defective work or materials upon inspection shall not in any way prevent later rejection of that work or materials when such defect is discovered by the Agency nor obligate the Agency in any way to accept the defective work or materials as part of final acceptance of the entire Work.

1.8.3 Scheduling of Inspection:

The Agency requires advance written notice prior to major Project work tasks such as an inspection for start-up of work for a Project, trenching, pipe laying, pipe backfilling if different from laying, testing, CCTV, lateral taps, connections to existing sanitary sewers, raising covers to grade and other work tasks as directed by the Agency. The amount of time required for notice varies among the Agencies listed in Section 1.2.1. Contractor shall contact the individual Agency having jurisdiction over the Project to determine the specific advance notice time requirements and shall adhere to those requirements. Generally, Agencies require one or two days advance written notice for the major Project tasks listed above. A minimum of three working days notice is required for all outlying service area inspections.

The Agency requires at least one working day notice for inspection cancellation. Failure to provide such notice shall result in a one working day delay from the originally scheduled inspection date(s) before another inspection can be scheduled. In addition the Agency at its sole discretion may charge for up to one work day cost of providing an Agency Representative for cancellation of any inspection in less than the notice period required by the Agency and for failure to work on days when inspections have been scheduled. All notices for inspections and cancellations of inspections shall be submitted to the Agency in writing.

The Contractor shall submit a schedule to the Agency presenting their proposed overall construction operations before individual inspections can be scheduled. This schedule shall identify all major construction tasks including sewer system testing. Whenever the Contractor varies the period during which work is conducted, the Contractor shall give the Agency written notice as soon as the Contractor becomes aware of the schedule change so that proper inspection may be provided. The provisions of the first paragraph of this Section 1.8.3 shall apply regarding the minimum time requirements for giving the Agency notice of schedule changes. At such times as the Contractor's work force on the sewer becomes less than a full day's activity, it shall be the Contractor's responsibility to notify in writing the Agency's Representative, on a daily basis, of the work requiring inspection. All installations which are to be backfilled shall be inspected and approved by the Agency's Representative prior to backfilling and the Contractor shall give notice in advance of backfilling to the Agency's Representative so that proper inspection may be provided.

1.8.4 Inspection Task Overview:

Job Start / Pre-Inspection

A. Contractor Submittals:

1. Schedule, *Section 1.8.3*
2. Cut Sheets, *Section 3.6*
3. Contractor Certification of Installation Procedures, *Section 3.7*
4. Bypass Pumping Plan, *Section 3.11*

5. Shop drawings – Contractor shall provide required shop drawings to the Agency for review as soon as is practical, but not less than fifteen work days prior to the time the materials that are the subject of the shop drawings are incorporated into the Project. The Agency may at its sole discretion establish earlier due dates for mechanical equipment such as pump stations. The Agency shall have a minimum of 10 work days to review shop drawings. The Agency shall not be responsible for delays in the Project due to the lengths of the initial reviews of shop drawings or the lengths of subsequent reviews, if any.

B. Agency's Representative:

1. Review and approval of all Contractor submittals before work and field inspection shall commence.

2. Verify Contractor has a copy of the Design and Construction Standards for Wastewater Collection Systems onsite at all times.

<u>Earthwork, Section 3.13</u>

A. Excavation / Trenching, *Section 3.13.1*

1. Bottom trench width

- *Approval required by Agency's Representative*

B. Dewatering, *Section 3.13.2*

C. Pipe Bedding, Pipe Zone Backfill, Trench Backfill, *Sections 3.13.3, 3.13.4 and 3.13.5*

1. Pre-Installation

a. Material for use

(1) Native (pipe bedding, trench selected backfill)

- *Test sample witnessed by Agency's Representative*

(2) Agency approved pit

- *Contractor to provide copy of material delivery ticket*

b. Contractor submittal:

(1) Soil Testing Report, *Section 3.15*

- *Sieve analysis*
- *Proctor*
- *Plasticity Index (PI)*

(2) Copy of material delivery ticket from Agency approved pit if applicable

c. Material approval required by Agency's Representative. Rejected materials shall be removed from the job site within 24 hours.

2. Installation, *Section 3.14*

a. All provisions for rigid and flexible pipe, *Section* Agency approved material for application

b. Density testing:

(1) Agency's Representative:

- *Notification to certified testing laboratory of depth, location, and interval of testing*

(2) Certified testing laboratory submittal:

- Field density test(s)
- *Approval* Required by Agency's Representative

c. Grade line check, *Section 3.8*:

- *Approval required by Agency's Representative*

<u>Pipe Installations, Section 3.14</u>

A. Pre-installation

1. Agency's Representative required acceptance:

a. Each piece of pipe for soundness and specification compliance

(1) Accepted pipe marked with paint or other permanent marking material

- *Notify contractor to remove non-accepted materials within 24 hours*

b. Pipe storage

c. Trenches are dry and free of debris before Pipe Laying

B. Installation

1. Agency's Representative required acceptance:

a. Installed pipe is marked pipe accepted from pre-installation inspection

b. Pipe spigot ends pointing in the direction of flow

c. Clean joint contact surfaces

d. Open end of pipe is capped if applicable

e. Water stops installed if applicable

f. Maximum allowable pipe joint deflection (pull)

g. Proper clearance between existing utilities

Manhole Construction and Installation, Section 3.16

A. Manhole base

1. Concrete pre-pour

a. Density testing

(1) Agency's Representative:

- *Notification to contractor of depth, location, and interval of testing*

(2) Certified testing laboratory submittal

- Field density test(s)
- *Approval Required by Agency's Representative*

2. Concrete pour

a. Contractor submittal

(1) Concrete mix ticket

- *Approval required by Agency's Representative*

b. Contractor shall use impression when forming manhole base

c. Witnessed by Agency's Representative

B. Manhole components

1. Each manhole component shall be inspected for soundness and specification compliance before and after backfilling

- *Approval Required by Agency's Representative*

2. Grouting shall be inspected for all inverts and joints.

   - *Approval Required by Agency's Representative*

C. Manhole backfilling

1. Follow requirements for trench backfilling, *Section 3.13.5*

2. Density testing

   a. Agency's Representative:

      (1) Notification to Contractor of depth, location, and interval of testing

   b. Certified testing submittal:

      (1) Field density test(s)

         - *Approval Required by Agency's Representative*

<u>Lateral Sewer Connections, Section 3.17</u>

A. New Mains

1. *Approval and witnessing required by Agency's Representative*

B. Existing Mains

1. *Approval and witnessing required by Agency's Representative*

<u>Abandonment of Existing Facilities, Section 3.18</u>

A. Disposition of abandoned facilities to be annotated on as-built documents.

<u>Testing, Section 3.19</u>

A. Gravity sewer mains and manholes, *Section 3.19.1*

1. Pre-testing

   a. Pipe

      (1) Pipe must have minimum 3 feet cover or approved encasement, *Section 3.19.1*

      (2) Test method must be approved by Agency's Representative, *Section 3.19.1*

         - Water exfiltration test
         - Low pressure air test

(3) All testing shall be performed only after all new tie-ins and other utilities are installed.

(4) Approved soils report is accepted by Agency's Representative

b. Manhole

(1) Visual inspection by Agency's Representative

(2) Approved soils report is accepted by Agency's Representative

2. Testing

a. Low pressure air test, Testing *3.19.1*

(1) Witnessed by Agency's Representative

B. PVC sewer testing, *Section 3.19.1*

1. Perform air testing

2. Perform deflection test

a. Compaction results must be accepted before paving and mandrelling

b. *Witnessed by Agency's Representative*

c. Color CCTV logs and recorded pictures provided to Agency in the required format

C. Force mains, *Section 3.19.2*

D. Pump station testing, *Section 3.19.3*

Initial Acceptance

A. Contractor and Agency Representative shall verify:

1. All sanitary sewer system components installed in accordance with the Construction Documents, including correction of all defects identified through testing if any, such that the subject sanitary sewer can be placed in operation in full accordance with State requirements.

2. All sanitary sewer system components backfilled to rough grades shown in the construction documents

3. All testing successfully completed in accordance with Section 3.19

4. Approved trap(s) in accordance with SD-30 in place at all connections to the existing sanitary sewer system.

5. Sanitary sewer marker balls in accordance with SD-22 and SD-23 installed.

6. Where profile wall pipe is used for new sanitary construction, four repair couplings for transition to like-size C900/C905 pipe shall be provided for each size of profile pipe utilized in the new construction.

Final Acceptance

A. Pre-Inspection: Contractor and Agency Representative shall verify:

1. All permanent paving in place

2. All utilities installed per the approved Construction Documents

3. Break pipe out of manholes base

4. Grout manhole inverts with non-shrink grout

5. Remove all debris from the inside of the manhole

6. All manhole collars where required

7. All locking devices shall be in-place

8. All mandrelling on flexible pipe completed and accepted by the Agency

9. All density failures reworked, retested, and accepted by Agency

10. An approved trap was installed downstream of developer installed infrastructure to protect Agency infrastructure and has been removed to place the upstream sanitary sewers into operation.

11. All force main testing taps removed

B. Inspection

1. Lines clean

   a. Before mandrelling
   b. Witnessed by Agency's Representative

2. Lines CCTV. inspected

   a. Witnessed by Agency's Representative

3. All retesting of lines completed

4. All discrepancies corrected

C. All monies owed the Agency paid in full

D. Signed and sealed as-builts submitted to Agency. As-builts shall be approved by Agency before final Acceptance

E. Approval required for all above listed items by Agency's Representative

F. All punch list items completed to the Agency's satisfaction

1.9 INDEMNITY

The Developer, the Engineer(s) and the Contractor(s) shall each indemnify and save harmless the Agency, its officers, agents, representatives and employees from all damages and costs to which they may be put by reason of injury or death to person(s) or damage to property resulting from the Engineer's and/or Contractor's negligence or carelessness in the performance of the work or in guarding the same; or from any improper materials, implements, or appliances used in its construction; or by or on account of any other act or omission of the Engineer(s), the Contractor(s) or their agents.

1.10 GUARANTEE

The Developer guarantees that the entire work constructed by him/her fully meets all requirements of these standards. The Developer shall make at his/hers own expense make any repairs or replacements made necessary by defects in materials or workmanship supplied by him/her that become evident to the Agency within one (1) year after the date of final acceptance and release of all bonds; and, restore to full compliance with the requirements of these standards, including the test requirements set forth herein for any part of the work constructed hereunder, which during said one-year period is found to be deficient with respect to any provisions of these standards. Any omission on the part of the Agency to discover defective work or materials at the time of construction shall not be deemed an acceptance, and the Developer will be required to correct defective work or materials discovered at any time before final acceptance and release of all bonds and within one year thereafter. The Developer shall hold the Agency harmless from claims of any kind arising from damage due to said defects. The Developer shall within 14 calendar days of receipt of written notice from the Agency, begin making all repairs and replacements to the satisfaction of the Agency. Such work shall include the repair or replacement of other work or materials damaged or affected by making the above repairs or corrective work, all at no cost to the Agency. If the Developer fails to make repairs and replacements promptly, the Agency may do the work and the Developer shall be liable to the Agency for the cost therefore.

1.11 VIOLATIONS

Non-compliance with any Section within these Standards constitutes violation of the Standards. The Agency retains the right, depending on the seriousness of the infraction, to refuse to accept the Project, until the violation is adequately resolved to the Agency's satisfaction.

1.12 TIME LIMITATION

Approval by the Agency of any public or private sanitary sewer extension shall be valid for a limited time, as will any related commitment of existing capacity in a particular public sanitary interceptor or collector sewer. In the event that construction of the new public or private sanitary sewer covered by the approved Construction Documents is not started within one (1) year from the date of approval, the Project shall be assumed to have been abandoned, and any subsequent proposal for reactivation shall be treated as a new Project.

1.13 STANDARD DRAWINGS

Included herein and made a part hereof are: Standard Drawings No. SD-1A through SD-38, which cover various design and construction subjects referenced in these Standards.

1.14 RULES AND REGULATIONS

The Agency's rules and regulations shall be adhered to at all times. Copies are available at the Agency's office.

1.15 APPROVED MATERIALS

Section 4 of these Standards contains materials and appurtenances which are generally approved for installation in the Agency's sanitary sewer system. The Engineer shall contact the Agency during the Project design process for additional materials and appurtenances that are approved for use in the Agency’s sanitary sewer system.

Any individual, corporation, or other entity may submit to the Agency other materials for approval. Such submittals shall include documentation demonstrating to the Agency's satisfaction that the material meets the technical and performance requirements set forth in these and other applicable Standards. The submittals shall also demonstrate to the Agency's satisfaction that use of the proposed material is in conformance with the Agency's goal of developing a reliable, safe, and efficient collection system with minimal maintenance requirements and maximum life.

Approval of substitute materials by the Agency does not relieve the Contractor for the performance of those specific materials or for compliance with the performance requirements for the entire work. All materials incorporated into the Project shall be installed in accordance with manufacturer’s recommendations. Contractor shall compare manufacturer’s recommendations with the requirements of these Standards and the approved Construction Documents. Any conflicts among the manufacturer’s recommendations, these standards and the approved Construction Documents shall be resolved in accordance with the requirements of Section 1.4 prior to the materials being incorporated into the work.

1.16 PRETREATMENT REQUIREMENTS

Each Agency listed in Section 1.2.1 has adopted an Industrial Waste Pretreatment Ordinance or Resolution that defines the types of wastes that may and may not be discharged to the Agency’s sanitary sewer system. It shall be the Developer’s responsibility to obtain a copy of the latest edition of the appropriate Ordinance and/or Regulation prior to commencing work. Particular attention shall be paid to the Local Limits established in each

Ordinance or Regulation, so that the Developer can make appropriate pretreatment plans prior to construction. Developer's are encouraged to contact those industrial users who will be discharging wastewater flows directly or indirectly into the facilities being constructed by the Developer to verify that all industrial pretreatment required are known and followed during construction of the Project. These requirements may be obtained from each individual Agency. Applications for Wastewater Discharge Permits and pretreatment plans must be filed with the appropriate Agency prior to construction. It is the Developer's sole responsibility to fully comply, and cause its Contractor to fully comply, with the terms of the approved Discharge Permits and pretreatment plans at all times while sanitary sewer improvements are being constructed, whether the Contractor is on site or not.

THIS PAGE LEFT BLANK INTENTIONALLY

DESIGN AND CONSTRUCTION STANDARDS

SECTION 2

DESIGN STANDARDS

TABLE OF CONTENTS

DESIGN STANDARDS

SECTION 2

Section	Description	Page No.
2.1	General Information	2-1
2.2	Design Criteria for Gravity Sewers	2-1
2.2.1	Calculation of Peak Wastewater Flow	2-1
2.2.2	Pipe Size Requirements	2-1
2.2.3	Pipe Slope Requirements	2-2
2.2.4	Curved Sewers	2-4
2.2.5	Main Sewer Stub-Outs	2-4
2.2.6	Standard Manholes	2-5
2.2.7	Conditions Requiring a Standard Manhole	2-5
2.2.8	Maximum Distance Between Manholes	2-5
2.2.9	Manhole Diameters	2-6
2.2.10	Manholes and Manhole Appurtenances	2-7
	a. Pre-Cast Manhole Sections	2-7
	b. Additional Requirements for Manhole Bases	2-7
	c. Changes of Flow Direction Within Manholes	2-8
	d. Additional Requirements for Pre-Cast Concrete Grade Rings	2-8
	e. Additional Requirements for Pre-Cast Concrete Section and Grade Ring Joints	2-8
	f. Frames and Covers	2-8
	g. Steps	2-9
	h. Connections to Manholes	2-9
	i. Corrosion Protection	2-9
	j. Odor Control Equipment	2-10
2.2.11	Shallow Manholes	2-10
2.2.12	Drop Manholes	2-11
2.2.13	Monitoring, Pretreatment Sampling, and Debris Screen Manholes	2-11
2.2.14	Manhole and Main Line Locations	2-11
2.2.15	Sewer Line Depths and Alignments	2-12
2.2.16	Shallow Mains and Laterals	2-14
2.2.17	Sewer Main Connections	2-14
2.2.18	Multiple Use of Sewer Trenches	2-15
2.2.19	Lateral Connections Into Collector Sewers and Manholes	2-15
2.2.20	Additional Requirements for Large Multi-Family (Greater Than Four Units Per Building), Commercial and Industrial Laterals	2-16
2.2.21	Water and Sewer Utility Crossings and Clearances	2-16

2.2.22 Other Utility Crossings and Clearances, Aerial Crossings, and Parallel Utility Installations 2-17
a. Below-Grade Utility Crossings and Clearances 2-17
b. Aerial Crossings of Sanitary Sewers and Air Jumper Pipes 2-18
c. Parallel Installation of Sanitary Sewers and Other Utilities 2-18
2.2.23 Siphons 2-19
2.2.24 Boring or Jacking Sewer Pipe 2-21
2.2.25 Full Frontage Extension 2-22
2.3 Construction Document Requirements 2-22
2.3.1 Complete Bound, Signed / Sealed Document Sets Required 2-23
2.3.2 Final Document Submittals 2-23
2.3.3 Data Sheet Required 2-23
2.3.4 Full Civil Improvement Drawings Required 2-23
2.3.5 Drawing Requirements 2-24
2.4 Design Criteria for Pumping Stations 2-28
2.5 Design Criteria for Force Mains 2-28
2.5.1 Flow Velocity Requirements 2-28
2.5.2 Air Relief Valves 2-29
2.5.3 Slope 2-29
2.5.4 Depth 2-29
2.5.5 Termination 2-29
2.5.6 Discharge Pipe 2-29
2.5.7 Design Pressure 2-30
2.5.8 Aerial Crossings 2-30
2.5.9 Hydraulic Losses 2-30
2.5.10 Thrust Blocks 2-30
2.5.11 Effluent Reuse Pipe Lines 2-30

THIS PAGE LEFT BLANK INTENTIONALLY

SECTION 2

DESIGN STANDARDS

2.1 GENERAL INFORMATION

The following subsections set forth the Agency's criteria for engineering design of sanitary wastewater collection systems. Factors, criteria and formulas are provided to guide and assist the Developer's Engineer in preparation of drawings and equipment and material specifications. Where criteria are not specified, the Engineer shall design using standards and procedures set forth in: 1) the Clark County "Uniform Standard Specifications for Public Works' Construction Off-Site Improvements" as amended; 2) the ASCE Manuals and Reports on Engineering Practice, specifically the ASCE Manual of Practice No. 60 for "Gravity Sanitary Sewer Design and Construction"; and 3) the "Recommended Standards for Sewage Works" (10 State Standards), latest edition. The design of polyvinyl chloride pipe installations shall also conform to the latest edition of “The Handbook of PVC Pipe: Design and Installation” by the Uni-Bell PVC Pipe Association. The design of private collector sewers and laterals shall also conform to the Uniform Plumbing Code, latest edition. Any conflicts between the requirements of these Design and Construction Standards and the reference standards cited above shall be resolved in accordance with the provisions of Section 1.4.

2.2 DESIGN CRITERIA FOR GRAVITY SEWERS

2.2.1 Calculation of Peak Wastewater Flow:

The design of a sanitary sewer system shall be based on the peak wet- weather wastewater flow to be generated within the area to be served, which shall be the sum of the peak sanitary flow plus an additional wet-weather flow allowance of not less than 25-percent of the peak sanitary flow. For purposes of these Standards, sanitary flow contribution rates for calculating design flows are expressed in terms of Equivalent Residential Units (ERU's). Engineer shall contact the Agency to obtain wastewater flow calculation requirements and verify appropriate ERU values for the Project, including the current development phase and ultimate development build-out. Table “C” presents typical ratios of peak flow to average flow in Clark County. Engineer shall contact the Agency regarding applicability of the data in Table “C” to the Project.

2.2.2 Pipe Size Requirements:

Public interceptor sewers, public collector sewers and private collector sewers shall be sized in accordance with the maximum depth-of-flow (d) to pipe-diameter (D) requirements (d/D) set by the Agency at the peak wet-weather wastewater flow rate determined in accordance with Section 2.2.1. At its sole discretion, the Agency may choose to increase the minimum diameters of public sanitary sewer mains to account for areas upstream of the Project that are likely to be tributary to Project facilities now or in the future. In such situations, the Agency shall advise the Developer and its Engineer of the peak wastewater flow generated in the area upstream of the Project that should be transported by Project facilities.

The minimum size for public interceptor sewers, public collector sewers and private collector sewers for any Project shall be based upon the approved sewer analysis or master plan for the Project area and the requirements of these Standards. In any case, the minimum acceptable nominal pipe diameter for a public interceptor sewer, public collector sewers or private collector sewer is 8 inches.

The minimum acceptable nominal pipe diameter for a lateral sewer serving a single family residence is 4-inches. The minimum nominal pipe diameter for a lateral sewer receiving flow from more than one residential dwelling unit in a multi-family structure is 6-inches. The Engineer shall determine the appropriate size for laterals serving multi-family, commercial, industrial, or institutional structures. The minimum nominal pipe diameter for a lateral serving commercial, industrial or institutional structures is generally 6-inches. The Agency reserves the right to require larger diameter laterals for specific circumstances such as lateral connections to sanitary sewers 15-inches in diameter and larger. The Engineer shall contact the Agency as early as possible in the Project design process to determine Agency-specific requirements for private collector sewers and laterals.

Private collector sewers and laterals shall generally meet the requirements for public sewers presented in these Design and Construction Standards and shall also meet the requirements of the Uniform Plumbing Code, latest edition. Private collector sewers, private force mains and private pump stations may only be installed in multi-family, commercial and industrial developments. Single family residential developments are prohibited from containing private collector mains, private force mains, private pump stations and related appurtenances except private laterals. All collector mains, pump force mains and pump stations located in single family residential developments shall be publicly owned and shall be located in public easements conforming to Section 1.5. Any conflicts between the requirements for private collector sewers and laterals in the Uniform Plumbing Code and in these Design and Standards shall be resolved in accordance with Section 1.4.

The minimum size for publicly-owned force mains is 4-inches, unless otherwise approved by the Agency.

2.2.3 <u>Pipe Slope Requirements:</u>

a. Public interceptor, public collector sewer and private collector sewer pipe slopes shall generally be selected to achieve the flow depth (d) divided by pipe diameter (D) ratio requirements of the Agency (design d/D ratio) when transporting the peak dry weather flow for the Project and upstream tributary flows designated by the Agency, if any. The Engineer shall submit to the Agency, with the Construction Documents submitted for approval, flow depth and velocity calculations in accordance with Sections 2.2.3.b and 2.2.3.c for all public interceptors, public collector sewers and private collector sewers within the Project. Pipe slopes shall be sufficient to permit the pipe to flow at a minimum velocity of not less than 2 feet per second (FPS) when half-full and not more than 10 feet per second when 75-percent full at the ultimate peak wet-weather design flow for the eventual final tributary area, unless otherwise approved by the Agency. The minimum slopes in Table “D” have been calculated to achieve flow velocities of at least 2 feet per second in each nominal sewer pipe size presented when that pipe is half-full where there is

sufficient flow from the tributary area upstream. The maximum slopes in Table "D" have been calculated to limit flow velocities in each nominal pipe size presented to not more than 10 feet per second when the pipe is 75-percent full. It is expected that where upstream flow quantities are sufficient to reach at least pipe half-full levels at peak dry weather flow, pipe slopes as designed for the Project will fall within the ranges presented in Table "D". Where upstream tributary areas do not generate sufficient flow to reach half-full levels in the public interceptors, public collector sewers and/or private collector sewers, then the minimum pipe slopes listed in Table "D" shall be utilized.

The intent of these requirements is to achieve a flow velocity of 2 feet per second or more at least once each day to limit solids deposition and sulfide production where upstream flow rates permit. The further intent of these requirements is to limit pipe wall erosion, limit manhole erosion and minimize odor generation that would occur at velocities greater than 10 feet per second. Terminal main sewers in cul-de-sacs and other locations less than 450 feet in length that will never be extended shall have a preferred minimum slope of not less than 0.010 ft/ft. In individual locations where the elevations of the existing mainline sewers to which the new sanitary sewer network will be connected preclude the use of the preferred minimum slope of 0.010 ft/ft for terminal sewers, the minimum slope for terminal sewers that will never be extended may be reduced to not less than 0.006 ft/ft where approved by the Agency. For terminal main sewers longer than 450 feet, the required minimum pipe slope shall be that slope which will generate a flow velocity of at least 3 feet per second at the peak dry weather flow rate from the tributary area at the downstream end of the terminal sewer when calculated in accordance with Sections 2.2.3.b and 2.2.3.c. In no case however shall the slope of said terminal sewer be less than 0.006 ft/ft regardless of pipe diameter or flow velocity at the peak dry weather flow rate.

Unless otherwise approved by the Agency, pipe slopes for sanitary sewer laterals shall fall within the ranges presented in Table "D" regardless of flow velocities within the laterals.

b. The Manning Equation shall be used to determine pipe flows, as follows:

$$V = \frac{1.49}{n} R^{2/3} S^{1/2}$$

where: V = mean flow velocity in feet per second

n = roughness coefficient, but not less than 0.013

R = hydraulic radius in feet

S = pipe slope in feet per foot, but not less than the minimum slope listed in Table "D"

c. A roughness coefficient (n) of not less than 0.013 shall be used for all pipe materials. A coefficient which will yield higher friction losses shall be used where disturbing influences are known or anticipated, such as:, disruption of flow by tributary inflows, offset joints, sewers having limited flow such that solids deposition may occur, or any other situation likely to impede sewer flows.

d. Hydraulic jumps shall be avoided whenever possible.

e. Where sustained velocities greater than 10 feet per second will occur in the public interceptor sewers or public collector sewers, energy dissipation and/or other measures approved by the Agency to prevent pipe and/or structure wall erosion shall be provided.

2.2.4 Curved Sewers:

Curved public interceptors, public collector sewers and private collector sewers, if allowed by the Agency, shall be constructed of C-900/C-905 PVC Class 150 minimum per Sections 4.8.2 or 4.8.3 as applicable and shall conform to the following:

Pipe Diameter	Minimum Curve Radii
8 inches	200 feet
10 inches	250 feet
12 inches	300 feet
15 inches	350 feet
>15 inches	per Agency requirements

The Contractor shall not exceed 75-percent of the manufacturer's allowable maximum deflection per joint of pipe. Curved sewers should be equidistant from the roadway or easement centerline at all points along the curvilinear portion of the sewer alignment. Laterals may not be constructed on curvilinear alignments under any circumstances.

Manholes shall be provided at both ends of curved sewers. If the length of the curved sewer is greater than the allowable distance between manholes specified under Section 2.2.8, then additional manholes shall be provided along the curved sewer to meet the requirements of Section 2.2.8. Marker balls in accordance with Sections 3.14 and 4.12.3 shall be placed along curvilinear sewers spaced at uniform intervals not exceeding 25-feet. Detailed record drawings shall be provided for all curved sewer showing the precise location of the curved sewer in relation to other site surface objects such as curb lines or edges of pavement so that the curved sewer can be readily located for future excavation.

2.2.5 Main Sewer Stub-Outs:

Stub-outs provided for future extension of main sanitary sewers shall not extend out more than fifty (50) feet from an existing manhole or from a new manhole constructed as part of the Project unless otherwise permitted by the Agency. Marker balls in accordance with Sections 3.14 and 4.12.3 shall also be placed at the upstream ends of the stub-outs and at uniform intervals of not less than 10-feet nor more than 25-feet along stub-outs greater than 25-feet in length. Sealed caps conforming to Section 4.6 and thrust blocks containing at least one cubic yard of concrete conforming to Section 4.11 shall be placed at the ends of stub-outs to withstand air-testing and sewer cleaning operations without damage or displacement. The horizontal and vertical locations of the ends of stub-outs shall be

indicated on the record drawings provided to the Agency at the closeout of the Project.

2.2.6 Standard Manholes:

Manholes and manhole components shall conform to Section 4.9. All standard manholes without steps shall have concentric manhole cover openings in accordance with Standard Drawing No. SD-2. All standard manholes with steps shall have eccentric manhole cover openings in accordance with Standard Drawing SD-3.

Manholes may have only one outlet pipe. Should the sanitary sewer system require multiple outlets, a specialized hydraulic structure shall be provided in lieu of a standard manhole. This structure shall be configured to optimize sewer flow hydraulics, minimize deposition of solids and facilitate maintenance.

2.2.7 Conditions Requiring a Standard Manhole:

Manholes shall be located as follows:

a. At the terminal end of each sewer line;

b. At each change in sewer line direction;

c. At each change in sewer line grade;

d. At each change in sewer line pipe size;

e. At each lateral connection to the sewer main 15-inches in diameter or larger, when so required by the Agency;

f. At the ends of curvilinear main sewer segments, if curvilinear sewers are allowed by the Agency;

g. At end of stub-outs longer than 50-feet, unless otherwise required by Agency;

h. All shallow and deep drop manholes per Standard Drawing SD-12; and,

i. Where a force main or dual force main set enters a gravity line – only one connection of a force main or dual force main set from a single pump station permitted per manhole.

2.2.8 Maximum Distance Between Manholes:

Except as otherwise required by the Agency, pipe size shall govern maximum distance between manholes as follows:

Pipe Size	Maximum Distance*
8 inches to 18 inches	450 feet
21 inches to 30 inches	500 feet
33 inches and larger	per Agency

* If the sanitary sewer slope exceeds 5-percent, the distance between manholes shall not exceed 250-feet unless otherwise approved by the Agency

2.2.9 Manhole Diameters:

Unless otherwise required by the Agency, pipe size, number of connections, changes in flow path and manhole depth shall govern the internal diameter of manholes as follows. Manhole internal diameters required for other combinations of inlets and flow paths shall be as specified by the Agency. The Agency at its sole discretion may require larger manholes than listed following based upon the actual numbers of connections, elevations of connections or any other factors deemed pertinent by the Agency:

Pipe Size	Connections / Flow Path	Manhole Minimum Internal Diameter
8 inches	Maximum of three inlet sewers and single outlet sewer – elevation of outgoing pipe invert less than one-foot lower than all incoming pipe inverts.	48 inches
10 to 12 inches	Straight-through flow path with single inlet and outlet pipes	48 inches
8 to 12 inches	All manholes with drop connections	60 inches
8 to 12 inches	More than three inlet sewers or elevation of outgoing pipe invert one-foot to two-feet lower than any Incoming pipe invert.	60 inches or as required by Agency
10 to 12 inches	With flow path bend in manhole or more than one inlet pipe	60 inches
15 to 24 inches	Straight-through flow path with single inlet and outlet pipes	60 inches
15 to 24 inches	All manholes with drop connections	72-inches or as required by Agency
15 to 24 inches	with flow path bend in manhole or more than one inlet pipe	72 inches or as required by Agency
27 inches and larger	All Flow path combinations	72 inches or as required by Agency

Force mains	All public and private manholes receiving discharges from force mains	60 inches or as required by Agency

Manholes greater than 20-feet in depth shall be a minimum of 72-inches in internal diameter, regardless of the size, number, or flow paths of inlet and outlet pipes. The Engineer shall contact the Agency as soon as possible in the Project design process to determine any additional requirements for manholes for sewers 27 inches and larger; for manholes having differences of inlet pipe and outlet pipe elevations one-foot or more; for manholes with drop connections; for manholes receiving discharges from force mains; and, for manholes having more than three inlet connections.

2.2.10 Manholes and Manhole Appurtenances

a. Pre-Cast Manhole Sections:

Pre-cast manhole sections shall conform to Section 4.9.1. Tie-down lugs in accordance with Section 4.9.4 shall be placed in the manhole cone sections as shown in Standard Drawing SD-1A. The lug shall be placed over the outgoing sewer pipe. Where manholes are placed in high groundwater areas and in other areas as designated by the Agency, the exteriors of the pre-cast sections, including bases, barrel sections and cones shall be waterproofed in accordance with Section 3.16.2 utilizing a coating material conforming to Section 4.9.10.

b. Additional Requirements for Manhole Bases:

All manholes on new main sewers and new laterals shall have pre-cast manhole bases. New manholes on existing sewers or existing laterals may have cast-in-place bases or pre-cast bases at the Contractor's option. Pre-cast manhole bases shall conform to Section 4.9.1, Standard Drawing SD-1 and other Standard Drawings as applicable. Cast-in-place base construction shall conform to Section 3.16.1, Standard Drawing SD-7 and other Standard Drawings as applicable. Concrete shall conform to 4.11.2.

Efficient flow passage through manholes is essential to minimize the generation of odors, the release of corrosion-causing gasses, and the deposition of solid materials in the manhole. Flow channels shall be provided in pre-cast and cast-in-place manhole bases to smoothly direct flows from the incoming pipe(s) to the outgoing pipe without turbulence, deposition of solids or reduction in flow velocity passing through the manhole. The width of the flow channels for the main sewer passing through the manhole shall not exceed the internal diameter of the outgoing sewer. The width(s) of the flow channel(s) for incoming branch sewer(s) entering the manhole normal to the main sewer shall not exceed the internal diameter(s) of the branch sewer(s). All flow channels within a manhole shall be the same height and shall extend to at least three-inches higher than the crown of the highest incoming sewer. The tops of flow channels shall be sloped toward the main sewer not less than1v:10h to facilitate sloughing off of debris. Flow channels shall conform to Standard Drawing SD-9. Flow channels in pre-cast bases shall be factory-installed. Flow channels in cast-in-place bases shall be field-installed.

c. Changes of Flow Direction Within Manholes:

For public sewer mains 12-inches nominal diameter and larger, the maximum change in angle of the flow path through a manhole shall not exceed 45-degrees, unless otherwise approved by the Agency. Where the total change of flow direction ranges from 46-degrees to 90-degrees, two manholes shall be used. Where the total change of flow direction ranges from 91-degrees to 120-degrees, three manholes shall be used. For changes of direction greater than 120-degrees, special hydraulic structures shall be provided. Engineer shall contact the Agency early in the Project design process to determine the requirements for special hydraulic structures. Where multiple manholes are used to accomplish changes of direction greater than 45-degrees, the change in direction accomplished in each manhole shall be approximately equal. Multiple manholes shall be spaced to facilitate sanitary sewer maintenance and avoid conflicts with other utilities. The spacing between multiple manholes shall generally range from a minimum of 1-foot to a maximum of 3-feet for each foot of depth to the invert of the sanitary sewer. The Engineer shall contact the Agency early in the Project design process to determine the spacing required for multiple manholes.

d. Additional Requirements for Pre-Cast Concrete Grade Rings:

Grade rings shall conform to 4.9.1 and shall be installed in accordance with Standard Drawing SD-5. A minimum of one and a maximum of two grade rings shall be used for each manhole. The total distance from the top of the manhole cone to the top of the manhole frame after final paving shall not exceed eighteen inches including grade rings, joints between the cone/grade rings/frame, and the height of the manhole frame.

e. Additional Requirements for Pre-Cast Concrete Section and Grade Ring Joints:

Manhole joints shall be sealed and grade rings shall be grouted in accordance with Section 3.16.6.

f. Frames and Covers:

Manhole frames and covers shall conform to Section 4.9.2. The “Standard Concentric Dual Cover and Frame” shown in Standard Drawing SD-2 shall be used for manholes without steps. The “Standard Eccentric Dual Cover and Frame” shown in Standard Drawing SD-3 shall be used for manholes with steps.

Unless otherwise approved by the Agency, manholes shall have a 12-inch minimum thickness reinforced concrete collar as shown in Standard Drawing SD-4. Collars in paved areas shall be circular and a minimum of 5-feet in diameter unless otherwise required by the Agency responsible for the roadway. Collars in landscaped areas shall be circular and a minimum of 5-feet in diameter. Collars in unimproved areas shall be a minimum of 5-feet square.

g. Steps:

Where required by the Agency, manholes shall be fitted with steps in accordance with Section 4.9.3, Standard Drawing SD-1A, Standard Drawing SD-6.and OSHA requirements. Steps shall be factory-installed only. Steps may not be field-installed under any circumstances. Manhole steps shall be aligned in each section to form a continuous ladder within the assembled manhole with steps equally spaced vertically at a maximum distance of 16 inches. The manhole steps shall face 180 degrees from the outgoing sewer pipe.

h. Connections to Manholes:

New manholes shall be designed such that all flexible connectors required for new sewers are factory-installed and meet the requirements of Section 4.9.5. A reinforcing bar as shown in Standard Drawing SD-9 shall be placed above each pipe connections in new pre-cast manholes to facilitate final grouting of the pipe connections into the manholes. The spaces between the protruding pipe ends entering the manholes shall be grouted in accordance Section 3.16.4 to form a smooth interior surface to prevent the accumulation of sewer solids and to fully support the upper projection of the sewer pipe into the manhole. Elevations of connections shall be designed in accordance with Section 2.2.17.

Connections of new sewers to existing manholes and existing sewers to new manholes shall be made using field-installed flexible connections conform to elevation requirements of Section 2.2.17 and the installation requirements of Section 3.16.8. Field-coring of holes into new manholes for installing connections for new sewers is not permitted, except with the prior approval of the Agency.

i. Corrosion Protection:

Corrosion Projection meeting Agency requirements and conforming to Sections 3.16.8 and 4.9.9 shall be provided in all locations where it may be reasonably anticipated that odors and/or corrosive gasses may be released in the sewer as a result of turbulence or other factors. The Engineer shall contact the Agency as early as possible in the Project design process to identify any additional requirements for design and installation of PVC corrosion liners in areas of high groundwater. As a minimum corrosion protection shall be provided in the following locations:

1. All manholes for sewers 15-inches in diameter and larger;

2. All manholes where the pipe slope decrease between upstream and downstream sewers greater than 4-percent;

3. All manholes for sewers 10 inches and larger where there are changes in horizontal direction greater than 45 degrees or there are more than one inlet connection to the manholes;

4. All manholes receiving the discharge from a force main and one manhole upstream and one manhole downstream from the manhole receiving the discharge from a force main;

5. All siphon inlet and outlet structures and the next manhole downstream from the siphon outlet structure;

6. All drop manholes per Standard Drawing SD-12;

6. All pump station wet wells; and,

7. All other locations as directed by the Agency

j. Odor Control Equipment:

The Engineer shall contact the Agency early in the Project design process to determine the specific odor control equipment requirements, sizing, and equipment placement for each individual project.

Generally, odor control equipment shall be placed: upstream and downstream manholes of inverted siphons; at pump station wet wells; on the manholes downstream of ends of energy dissipating devices; at manholes where incoming flow velocities exceed five (5) feet per second at peak dry weather flow; at manholes receiving discharges from force mains and one manhole upstream and one manhole downstream from the discharge location; at drop manholes and one manhole upstream and one manhole downstream from the drop manhole; and, in other locations as directed by the Agency where there is potential for odors to escape from the sanitary sewer system.

Generally, for locations with limited potential for odor emissions, manhole odor-control insert units conforming to Section 4.10.1 shall be installed where designated by the Agency.

In addition to or in lieu of odor control inserts, the Agency reserves the right to also require that gas phase and/or liquid phase odor control equipment conforming to Section 4.10.2 shall be provided at sanitary sewer locations where the potential for odor generation is deemed significant by the Agency.

2.2.11 Shallow Manholes:

Shallow manholes are manholes having a depth from top-of-rim to top of pipe less than 4 feet. Shallow manholes may only be used when permitted by the Agency only as a last resort when sewer depths and configurations cannot be modified to utilize conventional manholes. Shallow manholes shall be designed in accordance with Standard Drawing SD-13.

2.2.12 Drop Manholes:

Drop manholes are not permitted unless there is absolutely no other practical option for connecting sanitary sewers of differing elevations, including running parallel sewer mains. In lieu of drop manholes, the grades of new sanitary sewers shall be adjusted such that the invert of the new sewer matches the crown of the existing sewer at the connecting manhole. Grades shall not cause the maximum sewer velocities in new sewer to exceed the requirements of Section 2.2.3 or cause erosion in the receiving manhole. The use of drop manholes will be reviewed by the Agency on a case-by-case basis. The extra cost of additional sewer mains required to eliminate drop manholes shall not be considered as justification for allowing drop manholes. If allowed by the Agency, they shall be constructed per Standard Drawing SD-12. All drop manholes regardless of incoming or outgoing pipe sizes shall have corrosion protection per Agency requirements and conforming to Section 2.2.10.i.

2.2.13 Monitoring, Pretreatment Sampling, and Debris Screen Manholes:

The Agency at its sole discretion may require the installation of special on-site monitoring manholes per Standard Drawings SD-1A and SD-1B, pretreatment sampling manholes per Standard Drawing SD-34 and/or Debris Screen Manholes per Standard Drawing SD-37 for certain commercial, industrial and institutional customers to facilitate flow monitoring and wastewater sampling for its Pretreatment Program and to prevent the entry of detrimental materials into the public sanitary sewer system. The commercial/industrial/institutional customer served by such manholes shall own these manholes and shall provide regular maintenance such that the Agency may perform required monitoring and detrimental materials are prevented from entering the public sewer system.

The Engineer shall contact the Agency early in the Project design process for specific design criteria for monitoring, pretreatment sampling, and debris screen manholes. All such manholes shall also comply with the criteria set forth by the design and development standards of the Agency, the Uniform Plumbing Code, and the requirements of all other applicable building, plumbing and wastewater discharge codes and regulations. Any conflicts between the requirements of these Design and Construction Standards and the Uniform Plumbing Code shall be resolved in accordance with the provisions of Section 1.4.

2.2.14 Manhole and Main Line Locations:

Public interceptor sewers and public collector sewers shall not be placed beneath parallel sidewalks, parallel curbs/gutters, parking areas, walls, overhead power or communications wiring, street light mast arms, parallel roadway medians, subdivision gated medians, parallel parkway areas, other areas where trees will be planted, or in any location which is designed to collect water. Where public interceptor sewers and public collector sewers must cross sidewalks, curbs/gutters, roadway medians, and unpaved parkway areas, these crossings shall be perpendicular to the maximum extent practical.

Sanitary sewer manholes shall be located in the roadway pavement a minimum of 8-feet from back of curb or a minimum of 6-feet from edge of pavement for non-curbed streets wherever practical. Terminal sanitary sewer manholes shall be

located in the pavement a minimum of 8-feet from any curb in any direction. Manholes shall not be placed in areas designed to collect storm water. Manholes shall be located outside the wheel path of motor vehicles and in areas where parked vehicles will not hinder access to the manhole. Standard Drawing SD-19 shows typical locations for various utilities in a street cross-section. All public manholes that are not located in public right-of-ways shall have all-weather, 24/7 drivable access as required by the Agency capable of supporting an H20 vehicle loading and at least 20-feet wide for sewer maintenance purposes. Easement areas for public and private sewers, force mains and pump stations shall conform to Section 1.5. Grass and other non-reinforced vegetative surfacing are not considered a drivable access. Specially designed access surfaces may be considered by the Agency. Terminal or "dead-end" access drives shall be avoided wherever possible. Where terminal access drives are required, such drives shall have turn-arounds sufficient in size for conventional sewer maintenance vehicles having turning radii of not less than 50-feet.

2.2.15 Sewer Line Depths and Alignments:

Each sanitary sewer system design submitted to the Agency shall be given individual consideration by the Agency regarding depth and alignment requirements per the specific construction and site conditions. Items of consideration will include: sewer sizes and slopes; sewer depth of cover; locations and configurations of connections to the existing sewer system; potential extensions of the Project facilities to serve upstream areas; and, other factors as determined by the Agency.

The horizontal and vertical locations of existing sewers, other Agency utilities and other utilities/site-objects, if any, shown in Agency records have been obtained from available records which may or may not be accurate. As such, the Agency makes no guarantee, expressed or implied, that the existing sewers, other utilities and/or site objects are in the locations shown in Agency records nor shall the Agency bear any costs whatsoever associated with redesign or relocation of Project facilities caused directly or indirectly by the differences between the actual locations of existing sanitary sewers, other utilities or site objects and the locations of those sewers/utilities/site-objects depicted in Agency records. Accordingly, the Developer, Engineer and/or Contractor as appropriate shall bear the full risk and responsibility to confirm the locations of the existing sewers or other utilities, if any, to which the Developer will connect its Project facilities or other existing utilities/site objects that may interfere with construction of those facilities.

The Agency shall not waive the requirements of these Design Standards, the reference standards cited in these Design Standards or the approved Construction Documents to accommodate the failure of the Developer, Engineer and/or Contractor to accurately locate existing utilities or other site objects prior to the start of construction.

Should the actual locations of existing utilities and/or site objects be found during construction to interfere with the installation of sanitary sewers, laterals and/or other sanitary system appurtenances depicted in the approved Construction Documents, the Engineer shall prepare an alternative design conforming to the Design Standards to resolve the interference and submit that alternative design for Agency review prior to proceeding with the Project work affected. The Agency shall be under no

obligation to approve the alternative design and may require the relocation of the existing utilities creating the interference such that the improvements shown in the approved Construction Documents can be completed as originally approved.

All new sanitary sewers shall be kept on the same sides of the street throughout the development whenever possible and shall be designed at such depths as required by the Agency on a case-by-case basis such that these sewers can receive flows by gravity from the Project area and additional upstream tributary areas as designated by the Agency, if any. Where feasible, the following minimum depths shall be required, but these minimum depths shall not to viewed as acceptable depths unless confirmed by the Agency on a case-by-case basis:

Case I — Greater than 60' Right-of-Way -

Minimum 7-feet from finish grade to tops of the new mainline sanitary sewers

Case II — 60' Right-of-Way or less that is part of a developed area of the Project such as a subdivision -

Minimum 5-feet from finish grade to the tops of new mainline sanitary sewers

Case III — 60' Right-of-Way or less, that is not part of a planned subdivision or development -

Minimum of 6-feet from finish grade to top of the new mainline sanitary sewer

Laterals — Laterals shall not have less than 4-feet of cover from the top of the lateral to finish grade anywhere within the public right-of-way or in dedicated sewer easements.

Sewer mains greater than 20-feet deep shall only be considered by the Agency on a case-by-case basis only. For depths greater than 20-feet, SDR 35 PVC shall be replaced with alternative pipe materials suitable for the depth of cover, backfill materials groundwater levels, and anticipated surface live loads and dead loads. The bottom of the trench for placement of a sanitary sewer shall have a minimum width of pipe outside diameter plus 16-inches and a maximum width as recommended by the Uni-Bell PVC Pipe Handbook (if applicable) and pipe manufacturer but not greater than pipe outside diameter plus 36-inches. The trench width, pipe bedding method, pipe haunch support and pipe cover to 1-foot over the top of the pipe shall be designed by the Engineer. This design shall be sealed by the Engineer in accordance with State of Nevada law and shall be submitted to the Agency for approval with the Construction Documents for the Project. For all pipe installations greater than 20 feet in depth, the Engineer shall submit structural calculations demonstrating the suitability of the pipe materials and installation methodology proposed with the initial submittal of the Construction Documents for Agency review.

2.2.16 Shallow Mains and Laterals:

Sanitary sewer mains and laterals that do not meet the minimum depth criteria specified in Section 2.2.15 shall be avoided to the maximum extent practical. The Engineer shall demonstrate that no other practical option exists for locating the sanitary sewer that would meet the minimum depth criteria specified in Section 2.2.15. Cost alone shall not be considered as acceptable justification for violating the minimum depth requirement. Key justification factors that will be considered for allowing the construction of shallow sewer mains include: unusually shallow existing mainline sewers or elimination of pump stations. Where the criteria for line depths identified in Section 2.2.15 cannot be achieved and depth of cover over the top of the pipe will be less than 3 feet, the new mainline sanitary sewers and laterals shall be constructed as required by the Agency. Construction of a berm or mounding of material to gain 3 feet of cover will not be allowed.

2.2.17 Sewer Main Connections:

The required invert elevations of new sanitary sewer connections to new or existing sanitary sewer manholes shall be as directed by the Agency and shall be generally in accordance with the following criteria:

a. Straight-through: Match the slope of upstream and downstream sewers.

b Change of Direction: Where the incoming and outgoing pipes are the same size, the invert(s) of incoming pipe(s) shall be 0.2 feet higher than the invert of the outgoing pipe.

c. Where the incoming and outgoing pipes are of different diameters and the outgoing pipe is 24-inches in diameter or less, the crowns on the incoming pipes and outgoing pipes shall be at the same elevation.

d. For new sewers where the receiving sewer is larger than 24-inches in diameter, the connection requirements for upstream tributary sewers shall be determined on a case-by-case basis. The Engineer shall contact the Agency early the Project design process to determine sewer connection requirements.

e. For connections of new sewers to existing manholes where the new sewers are larger than 15-inches in diameter, the connection requirements to existing manholes will be determined on a case-by-case basis. The Engineer shall contact the Agency as soon as possible in the Project design process to determine sewer connection requirements.

New sewer connections to new sewer manholes shall conform to Section 2.2.10.h where new sewers are to be connected to existing manholes, the base of the manhole shall be core-drilled in accordance with Section 3.16.4 and an appropriate seal boot conforming to Section 4.9.5 shall be used to positively seal against infiltration and exfiltration. Break-in connections shall not be permitted. The flow channels in the bases of existing manholes to which new sewers are connected shall be modified in accordance with Section 2.2.10.b to provide for efficient passage of wastewater flows. Manhole flow channel modifications shall generally conform to Standard Drawing SD-9.

New sanitary sewers shall not be connected to smaller existing main sewers unless approved by the Agency. In such cases, the Engineer shall submit hydraulic analyses demonstrating that the existing main sewer will not be hydraulically overloaded by the new sewer at all phases of development build-out.

2.2.18 Multiple Use of Sewer Trenches:

Sanitary sewers and sanitary sewer laterals shall be placed in individual trenches and no other parallel utilities shall be placed in these trenches. Typical separations between sanitary sewers and other utilities in parallel and crossing configurations are described in Section 2.2.22 and in Standard Drawing SD-19. Alternative separation distances and configurations shall be reviewed by the Agency on a case-by-case basis.

2.2.19 Lateral Connections Into Collector Sewers and Manholes:

Lateral connections shall be constructed in accordance with Section 3.17 and Standard Drawings SD-22 through SD-27 as applicable for connections to new and existing sewers. Sanitary sewer laterals shall be installed perpendicular to the main sanitary sewer and shall be straight, without curves or horizontal bends unless otherwise approved by the Agency. Laterals shall not be located under residential driveways unless otherwise approved by the Agency.

Deep lateral connections such as the typical example shown in Standard Drawing SD-27 may only be used upon the specific approval of the Agency. The Engineer shall demonstrate to the Agency that there are no other options in lieu of providing deep lateral connections including parallel sewers as shown in Standard Drawing SD-24. If permitted, Engineer shall include specific designs for deep laterals in the Construction Drawings.

Laterals shall be connected directly to public collector sewers or private collector sewers at least 8-inches in diameter. Where permitted/required by the Agency, laterals may also be connected to public or private manholes provided said manholes have outlet pipes at least 8-inches in diameter. Laterals may not be connected directly to public interceptor sewers unless specifically approved by the Agency. Laterals serving single family buildings may not be connected to other laterals under any circumstances. Residential buildings having four units or less shall have individual laterals for each unit and said laterals shall be connected to public or private collector sewers. Laterals for buildings having more than four units shall be designed in accordance with Section 2.2.20.

For new collector sewers 12-inches in diameter and smaller, laterals shall be connected to these new sewers as shown in Standard Drawings SD-22 or SD-23 as applicable. For new collector sewers or interceptor sewers 15-inches and larger, laterals shall **NOT** be connected directly to these sewers, unless approved by the Agency. For collector and interceptor sewers 15-inches and larger where there are more than three lateral connections per 500-feet of collector/interceptor sewer, a separate collector sewer shall be installed to receive the lateral connections as shown in Standard Drawing SD-24. This parallel collector sewer may be publicly or privately owned, but shall be constructed in accordance with all requirements for

public sewers and shall be connected to the 15-inch and larger sewer at the next downstream manhole as shown in Standard Drawing SD-24. Where there are three or fewer lateral connections per 500-feet of main sanitary sewers and where permitted by the Agency, laterals may be connected to the collector or interceptor sewer via individual manholes as shown in Standard Drawing SD-24.

Lateral connections into new collector sewers shall be by use of appropriately sized wye fittings conforming to Section 4.6. Lateral connections into existing sewer shall be by use of appropriately sized wye fittings conforming to Section 4.7 or tapping saddles conforming to Section 4.7.5 as permitted/required by the Agency.

Lateral connections to manholes, where permitted/required by the Agency, shall be constructed in accordance with Sections 2.2.10.h, 2.2.17 and 3.16.4. The lateral shall be connected such that the crown of the lateral matches the crown of the outgoing main sewer, unless otherwise directed by the Agency. The exiting flow channel in the manhole shall be modified as required in Section 2.2.10.b to direct flows from the lateral to the main sewer without causing ponding, turbulence or solids deposition in either the lateral flow path or mainline sewer flow path. Break-in connections into pipes or manholes shall not be permitted under any circumstances.

2.2.20 Additional Requirements for Large Multi-Family (Greater Than Four Units Per Building), Commercial and Industrial Laterals:

Each building's lateral sewer shall connect directly to a public collector sewer or private collector sewer at least 8-inches in diameter. Where permitted/required by the Agency, laterals may also connect to public or private manholes provided said manholes have outlet pipes at least 8-inches in diameter. Laterals may not be connected directly to interceptor sewers or other laterals unless specifically approved by the Agency.

Laterals shall be sized in accordance Section 2.2.2. Unless otherwise approved/required by Agency, the minimum size of individual laterals for large multi-family, commercial and industrial establishments shall be at least 6 inches in diameter. Laterals shall have slopes of not less than indicated in Table "D", unless otherwise approved by the Agency. All commercial, industrial, and adult-care and other facilities are required to meet the Agency's pretreatment requirements and the individual laterals serving these facilities shall be provided with appropriate sampling manholes in as shown in Standard Drawing SD-34 and, where required by the Agency, debris screen manholes as shown in Standard Drawing SD-37.

2.2.21 Water and Sewer Utility Crossings and Clearances:

Crossings of potable water lines and sanitary sewers shall be constructed in accordance with the requirements of Section 2.22 and all other applicable provisions of the Uniform Design and Construction Standards for Potable Water Systems (UDACS), latest edition. Crossings of reuse water lines and sanitary sewers shall be constructed to the same requirements as potable water line crossings, unless otherwise approved by the Agency.

2.2.22 Other Utility Crossings and Clearances, Aerial Crossings, and Parallel Utility Installations:

a. Below-Grade Utility Crossings and Clearances

Crossings of new utilities beneath existing main sanitary sewers and laterals shall conform to Standard Drawing SD-20. Crossings of new utilities above existing or new main sanitary sewers and laterals shall conform to Standard Drawing SD-21. The Engineer shall contact the Agency as early as practical in the Project design process to establish the specific requirements for all crossing designs.

The vertical separation between sanitary mains or laterals where they cross above or below other utilities shall be a minimum of 2-feet from outside of utility to outside of sanitary sewer pipe, unless otherwise approved by the Agency. Where a new utility crosses beneath an existing sanitary sewer or lateral, the trench wall of the lower utility shall be supported by tight sheeting which shall remain in place. The tight sheeting shall extend a minimum of 1 foot each way from the outside of the pipe wall of the upper utility for each foot of elevation difference between the invert of the lower utility and the upper utility, but not less than 3-feet each way from the outside of the sanitary sewer or lateral.

Where a new utility crosses beneath and existing sanitary sewer or lateral, the bedding for the lower utility shall conform to Section 3.13.3 and shall be placed on undisturbed soil. The lower utility shall then be backfilled from the top of bedding to the springline of the existing sanitary sewer or lateral with controlled low strength material (CLSM) having a compressive strength after seven days of not less than 100 psi nor more than 300 psi. The CLSM shall extend horizontally along the lower utility to the end of the tight sheeting placed to support the trench wall of the lower utility.

Where a new utility crosses above an existing sanitary sewer or lateral and the vertical clearance between the utility and the sanitary sewer or lateral is 2-feet or less, the existing sewer/lateral shall be excavated to the springline of the pipe. The existing bedding beneath the existing sewer/lateral shall not be disturbed. A reinforced concrete beam with 2-inch Styrofoam cushion conforming to Section 4.9.12 shall be placed over the existing sewer/lateral as shown in Standard Drawing SD-21. The new utility shall be bedded and backfilled above the reinforced concrete beam in accordance with Section 3.13. Care shall be taken in placing the new utility above the sewer/lateral to avoid impacts or point loads on the sewer/lateral. Following the placement and backfilling of the new utility, the lower main sanitary sewer shall be televised in accordance with Section 3.19.1.e; and, if access is available, the lower sanitary lateral shall also be televised in accordance with Section 3.19.1.e.

In addition to the above crossing clearance and utility support requirements, where new round storm sewers cross above or below sanitary sewers and laterals, the storm sewer shall be constructed using joints with gaskets meeting ASTM C-361 or ASTM C-443 (round gasket only) for a distance of at least 10-feet each way from the outside of the sanitary sewer/lateral pipe wall. If the storm sewer is an existing round pipe or a new or existing box or other non-

circular shape, the storm sewer joints shall be wrapped for a distance of at least 10-feet each way of the outside of the sanitary sewer/lateral pipe wall with a Mac Rap external joint sealing band or equal and the sanitary sewer/lateral shall be constructed of PVC pipe meeting Section 4.8.2 or 4.8.3 as applicable.

If utility crossings of sanitary sewers cannot meet the heretofore specified vertical and/or horizontal clearance requirements, the Engineer shall submit drawings depicting the proposed alternative crossing designs to the Agency for approval not less than 30 days prior to the start of construction of the subject crossing. It is recommended that these alternative crossings be presented to the Agency as early as possible in the Project design process as practical to solicit Agency input into the overall system configuration design. The Agency is under no obligation to accept the alternative crossing designs and may require relocation of sanitary sewer improvements to achieve the minimum horizontal and vertical clearances heretofore specified.

b. Aerial Crossings of Sanitary Sewers and Air Jumper Pipes

When aerial crossings of sanitary sewer and air jumper pipes are required, adequate support shall be provided for all joints in the pipe utilized for the crossings. The supports shall be designed to prevent frost heave, overturning and settlement. Precautions against freezing, such as insulation and increased slope, shall be provided. Expansion joints shall be provided between above ground and below ground sewers and at intervals along the overhead pipeline to allow for soil movement and thermal expansion/contraction. For aerial crossings over waterways and drainage channels, the impact of flood waters and debris shall be considered. Sanitary sewers and siphon air jumper pipes shall be placed not less than 10-feet above predicted 100-year flood elevations. Supporting structures within or less than 20 feet from the waterway path shall be designed to resist impacts from floating debris during maximum flood elevations. Where possible, the bases of supporting structures shall be located at least 10 feet horizontally or 5 feet vertically from predicted 100-year flood elevations, whichever yield the greatest separation from the waterway.

c. Parallel Installation of Sanitary Sewers and Other Utilities

Clearances between public interceptor sewers or public collector sewers and other utilities shall generally be in accordance with Standard Drawing SD-19. Where other utilities are present, where the clearances shown in Standard Drawing SD-19 cannot reasonably be achieved or where depth to sanitary facility inverts exceeds 10-feet, the Engineer shall consult with the Agency early in the Project design process to establish clearance requirements between public sanitary facilities and other utilities and site objects. The intent of the Agency that sufficient clearance shall be provided between public sanitary sewer system facilities and other utilities/site-objects to permit excavation to invert on either the sanitary facilities or the other utilities/objects without disturbance to the other. Where possible, the Engineer is also encouraged to provide the same amount of clearance between private sanitary sewer facilities and other utilities/site-objects.

Generally, sanitary facilities shall be placed in independent trenches as required under Section 2.2.18 such that construction of said trenches does not undermine the adjacent utilities. Where the parallel utilities are at relatively the same elevation as the sanitary facilities, there shall be at least 6 feet of clearance between the outside of the utility conduit and the outside of the manhole structures along sanitary sewer pipe. If the parallel utilities are at a different elevation than the sanitary facilities, then the clearance between the other utilities and the sanitary sewer shall be increased by at least 1-foot for each foot of elevation difference from outside to outside of pipe (higher or lower) between the other utilities and the sanitary facilities. The sanitary sewer shall be located such that the higher utility shall be outside of one-to-one angle-of-repose lines projected upward from the outsides of the pipe walls of the lower utility to permit excavation of the lower utility for repairs without undermining the upper utility.

2.2.23 Siphons:

Siphons (also known as inverted siphons or depressed sewers) will be approved by the Agency on a case-by-case basis and only will be considered when absolutely no other practical methods for avoiding obstructions are available. Cost alone shall not be considered by the Agency as justification for constructing siphons in lieu of alternative obstruction avoidance methods. A typical siphon design is shown in Standard Drawings SD-35A and SD-35B for general guidance. The Engineer shall contact the Agency early in the project design process to document the need for a siphon and to determine specific Agency requirements. In general, siphons shall meet the following requirements as a minimum:

a. Siphons shall have at least two barrels for transporting wastewater and shall be sized such that the siphon can transport the peak dry-weather wastewater design flow at full build-out of the development with one barrel out of service and can transport the full hydraulic capacity of the incoming sewer with all barrels in service, all without causing surcharging of the incoming sanitary sewer.

b. Siphon barrels shall generally be equal in diameter and sized such that the flow velocity through one barrel shall not be less than 3 feet per second at the average daily wastewater flow rate at full build-out of the completed development or 2 feet per second at the peak daily flow rate at the at the full build-out of the current phase of the development, whichever yields the smaller siphon barrel size. Upon approval of the Agency, three (or more) barrel siphons or siphons with differing barrel sizes may be utilized where small initial phases of large developments are being constructed in order to achieve minimum flow velocity requirements during early development phases.

c. Structures shall be placed at the inlet and outlet ends of all siphons such as those depicted in Standard Drawings SD-35A and SD-35B. Structures shall be centered over the siphon barrels. The structures shall be sufficiently large to facilitate maintenance of the siphon barrels including cleaning from either end. Siphon structures shall be protected against internal corrosion from the effects of H_2S as required by the Agency.

Siphon inlet flow channels and barrels shall generally be configured to direct all flows up to the peak daily wastewater design flow rate to a single barrel during initial Project phase and up to the average daily design wastewater flow rate at full build-out of the development. The additional siphon barrel(s) shall be configured to receive ultimate flows above the average daily design flow rate.

Provisions for independently isolating flow to each of the barrels of multiple-barrel siphons shall be provided at each end of the siphon. These provisions shall be configured to facilitate maintenance of the siphon barrel being blocked. Handwheel-operated fiberglass, aluminum or 316 stainless steel slide gates are required for each siphon barrel where the incoming sewer is greater than 12-inches in diameter and are preferred for all siphons. Drop-in fiberglass, aluminum or stainless steel plates may be used for siphon barrels where the incoming sewer 12-inches in diameter or less, where approved by the Agency. If drop-in plates are selected, the appropriate gate boards shall be provided and the access structures shall be equipped with a suitable tie-down lugs conforming to Section 4.9.4 at the top of the structures for pulling the plates using a cable come-along or similar equipment.

d. Siphon structures shall be leak-proof and adequately protected from flooding. The exteriors of siphon structures near waterways of drainage channels shall be waterproofed with a coating system meeting Section 4.9.10 and Agency requirements. Siphon structures shall be located a minimum of 25-feet outside 100-year floodways, unless otherwise approved by the Agency. Tops of siphon structures shall be placed at least 2-feet above predicted 100-year flood elevations.

e All siphons crossing streams, washes and drainage channels shall be buried not less than 5-feet below their current bottom elevation. The area over the siphon up to 2-feet above the 100-year flood elevation shall be covered with rip rap material ranging in particle size from 50 pounds to 150 pounds or a 12-inch thick reinforced concrete lining as directed by the Agency. The protection over the siphon shall extend not less than 20-feet each way of the siphon crossing to prevent exposure by a 100 year flood. Siphon barrels shall be encased in reinforced concrete as shown in Standard Drawing SD -14.

f. Siphon inlet and outlet structures shall be interconnected with a separate overhead air jumper pipe to facilitate the movement of air through the sewer system, unless otherwise approved by the Agency. The air jumper pipe size shall be determined by the Engineer, but its cross-sectional area shall be not less than 50-percent of the combined cross-sectional area of the siphon pipes, unless otherwise approved by the Agency. The air jumper pipe shall be located where it will be self-draining under all operating conditions and where it will be protected from damage in accordance with the requirements of Section 2.2.22.b. Siphons shall be equipped with odor control devices as directed by the Agency. Generally, small two-barrel siphons equipped with air jumpers in accordance with Section 2.22.22.b shall be provided with odor control inserts as specified in Section 2.2.10.j in the inlet and outlet structures. Where required by the Agency, larger siphons and small siphons where air jumpers cannot be provided shall be equipped with multi-phase odor control suitable for preventing both liquid-phase and gas-phase odor emissions as described in

Section 2.2.10.j. The Engineer shall submit to the Agency, the proposed odor control system for the siphon structures as early in the design phase as practical to allow Agency input into the design.

h. The Engineer shall furnish hydraulic calculations showing the operation of siphons through the various phases of the development from build-out of the first phase of the Project to full build-out of the ultimate area that will be tributary to the siphon to demonstrate that required siphon velocities will be achieved and that the incoming sewer to the siphon will not be surcharged to levels greater than the d/D values allowed by the Agency under any flow conditions. The calculations shall also demonstrate that the siphon can transport the peak dry weather flow of the ultimate tributary area with one siphon barrel out of service and without surcharging above the crown elevation of the incoming sewer. As a minimum safety factor, the elevation difference between the inlet and outlet chambers of siphons shall be at least 1-foot greater than the calculated hydraulic loss across the siphon at full development. The Agency, at its sole discretion, may require the elevation difference between the inlet and outlet structures to be increased depending upon the unique design and operating characteristics of the subject siphon and potential variations in incoming flow rates.

2.2.24 Boring or Jacking Sewer Pipe:

Where open cut trenches are not possible and boring or jacking is required, the sewer pipe casing shall conform to the Uniform Design and Construction Standards for Potable Water Systems, latest edition, UDACS Plate No. 23 and details shall be approved by the Agency prior to construction. Crossings of NDOT right-of-ways shall be in accordance with NDOT requirements. The Engineer shall provide casing details for all sanitary mains and services. Locations of the existing sanitary sewers in the vicinity of boring/jacking operations shall be determined in accordance with Section 2.2.15. Jacking and receiving pit locations and dimensions shall be shown on the plans. The plans shall also indicate relocation requirements for existing utilities in the vicinity of the jacking and receiving pits.

The horizontal and vertical locations of existing sewers, other Agency utilities and other utilities/site-objects, if any, shown in Agency records have been obtained from available records which may or may not be accurate. As such, the Agency makes no guarantee, expressed or implied, that the existing sewers, other utilities and/or site objects are in the locations shown in Agency records nor shall the Agency bear any costs whatsoever associated with redesign or relocation of Project facilities caused directly or indirectly by the differences between the actual locations of existing sanitary sewers, other utilities or site objects and the locations of those sewers/utilities/site-objects depicted in Agency records. Accordingly, the Developer, Engineer and/or Contractor as appropriate shall bear the full risk and responsibility to confirm the locations of the existing sewers or other utilities, if any, to which the Developer will connect its Project facilities or other existing utilities/site objects that may interfere with construction of those facilities.

The Agency shall not waive the requirements of these Design Standards, the reference standards cited in these Design Standards or the approved Construction Documents to accommodate the failure of the Developer, Engineer and/or Contractor to accurately locate existing utilities or other site objects prior to the start of construction.

Should the actual locations of existing utilities and/or site objects be found during construction to interfere with the boring/jacking operation as depicted in the approved Construction Documents, the Engineer shall prepare an alternative design conforming to the Design Standards to resolve the interference and submit that alternative design for Agency review. The Agency shall be under no obligation to approve the alternative design and may require the relocation of the existing utilities creating the interference such that the boring/jacking operation can be completed as originally approved.

2.2.25 Full Frontage Extension:

Public sanitary sewers shall be installed along the full frontage of all sides of Project property adjacent to the public right-of-way, unless otherwise directed by the Agency. Sewers shall be sized in accordance with ultimate hydraulic requirements of the Project and upstream tributary lands reasonably expected to be tributary to said sewers. When the sewer will not be used by the Developer, the minimum size of public sanitary collector sewer required in the frontage street shall be 8 inches or as directed by the Agency.

2.3 CONSTRUCTION DOCUMENT REQUIREMENTS

As part of the Construction Document package prepared for each Project and where required by the Agency, the Engineer shall include an overall Project description including ultimate peak wastewater flows at each connection to the public interceptor and/or collector sewer, including future Project phases, to assist the Agency in assessing potential impacts of the Project on the existing sanitary sewer system. This description shall list any possible industrial wastes that may be discharged to Agency sewers from development within the Project. The description shall also include and any upstream area that may ultimately be tributary to Project facilities. The Engineer shall contact the Agency early in the Project design process to identify these potential tributary areas. Finally, the Project description shall also include a Final Map and/or Parcel Map as appropriate to depict the overall extent of the Project. For multi-phased Projects, the description and maps should address both the Project currently proposed for construction and the remainder of the development that has already been constructed or will ultimately be tributary to the Project sewer system and thence to the Agency's sanitary sewer system, whether discharged directly through the Project sanitary sewer system or indirectly through other connections to the Agency's sanitary sewers.

The following are the requirements for the Construction Documents to be submitted to the Agency for approval of sewer design.

<u>ALL</u> OF THE REQUIREMENTS LISTED FOLLOWING MUST BE MET BEFORE THE PROJECT WILL BE APPROVED FOR CONSTRUCTION. DUE TO THE UNIQUE NATURE OF INDIVIDUAL PROJECTS, THE AGENCY, AT ITS SOLE DESCRETION, MAY ALSO ADD ADDITIONAL REQUIREMENTS THAT MUST ALSO BE MET BEFORE THE PROJECT IS APPROVED.

The Engineer shall perform all required QA/QC reviews and checking prior to submitting the Construction Documents and supporting information for review by the Agency. Any drawing sets or other submittals appearing or subsequently discovered to be incomplete, unchecked, or disordered will be returned to the submitter without review or comment. The Agency will not provide partial comments on such returned sets except to note the reason for return. Mylar drawings shall be original plots of high quality and shall be fully legible. Photo-copied mylars, mylars of poor overall quality, and mylars displaying excessive shading/hatching will not be accepted.

2.3.1 <u>Complete, Bound, Signed / Sealed Document Sets Required:</u>

All construction drawings, specifications, calculations, and other supporting documents submitted to the Agency shall be complete and bound as appropriate for expedient review; and, must be signed and have the stamp of a civil engineer who is registered in the State of Nevada in accordance with the Nevada Revised Statutes.

2.3.2 <u>Final Document Submittals:</u>

The Developer's Engineer shall provide the Agency two (2) final sets of original mylars of the civil improvement construction drawings.

2.3.3 <u>Data Sheet Required:</u>

All Construction Documents submitted to the Agency for review must be accompanied by a Data Sheet. A sample of this Data Sheet is provided on Table "E" and copies may be acquired from the Agency. When requested by the Agency, the Engineer for the Project for which the new sanitary sewers are being constructed shall also submit a capacity analysis of those new sewers and at least the next 1-mile of existing downstream sewers receiving wastewater flows from the new sanitary sewers. This capacity analysis shall address the current phase of the development and all future phases that will route wastewater flows through the new sewers being constructed as part of the Project and/or to the same downstream existing sewers.

2.3.4 <u>Full Civil Improvement Drawings Required:</u>

The Construction Document submittal shall include the full civil improvement package for the Project phase being constructed including paving, grading and drainage plans. The submittal shall also include the general civil design for the remainder of the Project, if any, depicting the overall intent of the paving, grading and drainage for other previously-constructed or future phases of the Project.

2.3.5 Drawing Requirements:

a. Include the application form to accompany the drawings

b. Identify the Agency that will ultimately receive the wastewater flow from the Project and shall provide construction inspection of the work and final approval.

c. Include station/offset system or coordinate system for locating improvements for construction. Systems shall be referenced from the centerline of street/easement unless otherwise approved by the Agency.

d Include plan/profile (on the same sheet) drawings of all new public interceptor and collector sewers depicting: pipe sizes; pipe materials; manhole rim elevations; pipe invert-in elevations; pipe invert-out elevations; elevations of connections to other new or existing sanitary sewers; locations/elevations of stubs and plugs; coordinates or station/offsets from Project baselines (or centerlines of streets); pipe slope; direction of flow; and, finish floor elevations of adjacent properties to which sanitary sewer service will be provided from the sewer depicted in the plan/profile drawing.

e. As a minimum, include plan views of new private collector sewers depicting: pipe sizes; pipe materials; manhole rim elevations; pipe invert-in elevations; pipe invert-out elevations; elevations of connections to other new or existing sanitary sewers; coordinates or stations/offsets from Project baselines (or centerlines of streets), pipe slope; direction of flow; and, finish floor elevations of adjacent properties to which sanitary sewer service will be provided from the sewer depicted in the plan view.

f. Include profile views (on same sheets as plan views) of private collector sewers when required by the Agency.

g. Provide azimuths or bearing angles (upstream to downstream) for new sanitary sewers.

h. Show the locations of launching/receiving work shafts for pipe jacking including all existing underground utilities, existing overhead utilities and existing site objects between the work shafts and within 100-feet surrounding the work shafts.

i. Identify new main sanitary sewers that are not parallel with Project and/or existing curbs and gutters as applicable.

j. Identify all sewers in the Project as “public” or “private” as applicable and identify upstream and downstream termini.

k. Provide separate quantity estimates for public and private facilities.

l. Include General Notes (Table "F.")

m. Provide distances (center to center), sizes, types, depths and northing/easting coordinates for all new manholes based on Agency approved coordinate system (to be on the plan/profile drawings) – Manholes shall be located to prevent the inflow of storm water runoff from adjacent surfaces. Number all manholes on all sheets.

n. Show existing system manhole numbers (if available)

o. Include "North" arrows on all plan and profile sheets and all details shown in plan view.

p. Include existing and new street names (if new names are known)

q. Identify drawing scales (horizontal and vertical) – scales shall be presented both numerically and as bar graphs on each drawing.

r. Depict all existing sanitary sewers and other utilities, including plan/profile drawings of existing public sewers and other utilities in the vicinities of any grading or utility work being performed as part of the Project, including points of connection to the existing sanitary sewer system. The horizontal and vertical locations of existing sewers, other Agency utilities and other utilities/site-objects, if any, shown in Agency records have been obtained from available records which may or may not be accurate. As such, the Agency makes no guarantee, expressed or implied, that the existing sewers, other utilities and/or site objects are in the locations shown in Agency records nor shall the Agency bear any costs whatsoever associated with redesign or relocation of Project facilities caused directly or indirectly by the differences between the actual locations of existing sanitary sewers, other utilities or site objects and the locations of those sewers/utilities/site-objects depicted in Agency records. Accordingly, the Developer, Engineer and/or Contractor as appropriate shall bear the full risk and responsibility to confirm the locations of the existing sewers or other utilities, if any, to which the Developer will connect its Project facilities or other existing utilities/site objects that may interfere with construction of those facilities.

The Agency shall not waive the requirements of these Design Standards, the reference standards cited in these Design Standards or the approved Construction Documents to accommodate the failure of the Developer, Engineer and/or Contractor to accurately locate existing utilities or other site objects prior to the start of construction.

Those utilities that have been directly located shall be so noted on the drawings and the specific locations where the physical confirmations were made shall be identified by coordinates or by station and offset from construction baselines.

s. Include a site grading plan presenting existing and proposed finished ground elevations and finish floor elevations of properties that will be served by Project improvements

t. Show all Right-of-ways and/or Easement Lines on plan/profile drawings and site grading plan, including all existing and new easements for all underground and overhead utilities. The recorded document numbers of all such easements shall also be shown on the drawings.

u. Show all new laterals and existing laterals (where known). Include profiles of lateral connections to public sewer manholes. Individual laterals may flow only into main sewers (publicly or privately owned) at least eight-inches in diameter. Laterals shall not be connected to main sewer stubs or other laterals. Residential laterals may not be placed under driveways.

v. Show grade elevations, sewer/manhole invert elevations, and top-of-manhole (TMH) elevations at sheet break points.

w. Provide a Signature Block per Agency requirements for Agency approval signatures.

x. List Developer's company name, business address, business telephone number (contact number Monday-Friday between 8:00 am and 5:00 pm Pacific time) 24/7, emergency contact telephone number and contact individual primarily responsible for the Project.

y. List Engineer's company name, business address, business telephone number (contact number Monday-Friday between 8:00 am and 5:00 pm Pacific time) 24/7, emergency contact telephone number and contact individual primarily responsible for the Project.

z. Show Engineer's Stamp

aa. Prepare all drawings in a neat and legible manner on sheets that measure 24-inches by 36-inches

bb. Provide a Vicinity Map (Major Cross Streets) for the Project.

cc. List the Project name shall be on each sheet.

dd. Provide Benchmark data

ee. Include a Legend identifying all symbology used of the drawings

ff. Provide a Master Utility Plan Sheet for all Projects having two or more utility sheets. The Master Utility Plan shall include all manhole data, pipe data, street data and Agency signature block. Indicate estimated peak dry weather sanitary wastewater flow in MGD, type of Project (single-family, multi-family, commercial, industrial, mixed-use or other type), and number of units by type.

For sewers, force mains or other sanitary sewer system appurtenances to be placed in easements the following additional drawings shall be provided:

gg. Plan views of all easement areas at legible scale in accordance with Standard Drawings SD-28A and SD-28B depicting all surfaces, grading slopes, the

proposed sanitary sewer, sanitary sewer laterals, all other underground and overhead utilities, drainage, removable bollards, fencing, block walls, wall footings, any other foundations, structures and all other site objects within or immediately adjacent to the easement that are to remain upon completion of construction.

hh. Cross-sections as appropriate at 1:1 vertical and horizontal scale showing existing and proposed ground elevations, all underground and overhead utilities, fencing, block walls, wall footings, other foundations, structures, and all other site objects within and immediately adjacent to the easement that are to remain upon completion of construction. One cross-section shall be provided at each end of the easement and one additional cross-section at key points in the easement for each 2 feet of fall along the easement, unless otherwise directed by the Agency.

ii. Two longitudinal profile views at the same scale as the plan view drawn along the easement at its centerline, one looking right from the centerline and the other looking left from the centerline, depicting the final ground surface, the proposed sanitary sewer, all other underground and overhead utilities, fencing, block walls wall footings, any other foundations, structures and any other site objects within the easement that are to remain following completion of construction.

jj. Show the “drivable access” in accordance with Section 2.2.14 provided for facility maintenance.

For sewers, force mains or other sanitary sewer system appurtenances to be placed in easements the following additional drawings shall be provided:

kk. Provide Lift Station site plan and elevation drawings - Designated as Private or Public

ll. Provide Lift Station Data Sheet - If Public

mm. Include Lift Station Shop Drawings - After design, but prior to installation, if Public

nn. Indicate the Date sent to Lift Station Operation For Review if Public Station

oo. Provide O&M Manuals

For subdivisions the following additional drawings shall be provided:

pp. Provide a Cover Sheet (Master Utility Plan)

qq. Indicate Lot and block numbers on all sheets

rr. Show typical cross-section of streets showing all underground utilities. (See Standard Drawing SD-19.)

ss. Sanitary sewers and appurtenances shall be designed to prohibit the entry of storm water inflow.

tt. Indicate the number of lots to be served by the Project and if the Project is a phase of a larger development indicate the total number of lots for full build-out (if known)

For pump stations, the Engineer shall contact the Agency for the drawing requirements for pump stations and ancillary facilities.

2.4 DESIGN CRITERIA FOR PUMPING STATIONS

Pump stations and force mains may only be used in lieu of gravity sewers only as a last option when gravity sewers are impractical. For pump stations, the Engineer shall contact the Agency early in the Project design process for the specific facility and design requirements for pump stations and ancillary facilities. As a minimum, pump stations and discharge force mains shall be designed to meet 1.36 times the ultimate peak dry weather flows from the anticipated tributary area to the pump station or 1.25 times the full pipe hydraulic capacity of the gravity sewer entering the pump station wet well, whichever is greater, with all pumps running. Capacity calculations used for sizing the pump station and downstream force main shall be provided to the Agency with the Pumping Station Data Sheet.

2.5 DESIGN CRITERIA FOR FORCE MAINS

The following subsections define design criteria and standards for raw wastewater and effluent reuse force mains. Dual force mains shall be provided for each pump station , each having 100-percent of the design hydraulic capacity required. Valving shall be provided to facilitate isolation of each force main for testing, maintenance or other purposes. Following are the general design criteria for design of force mains. The Engineer shall contact the Agency as early as practical in the Project design process to establish the specific design criteria for the Project.

2.5.1 Flow Velocity Requirements:

A velocity of no less than 3 feet per second shall be achieved in each force main when operating independently (with one pump on stand-by) at the peak wet-weather design flow calculated in accordance with Section 2.2.1. Calculation of force main velocity, design pressure and hydraulic losses shall be submitted to the Agency with Table "G". The minimum diameter for publicly owned force mains in the public right-of-way shall be four-inches, regardless of velocity at peak design flow, unless otherwise approved by the Agency.

2.5.2 Air Relief Valves:

Where approved by Agency, an automatic air relief valve with approved backflush attachments specifically designed for raw sewage applications shall be placed in the force main to prevent air locking. The air relief valve shall be placed above-ground or below-ground as required by the Agency. The air relief valve configuration shall be in accordance with Standard Drawing SD-31 or SD-32 as applicable. The air relief valve system shall be equipped with odor control system conforming to Agency requirements as presented in Section 2.2.10.j.

2.5.3 Slope:

Force mains shall maintain a positive uphill slope from the pump output to the manhole receiving the force main discharge. Slopes of force mains shall not exceed 0.5-percent, unless otherwise approved by the Agency. Changes in force main slope and direction should be minimized. To limit accumulations of gases, no segment of a force main shall have a zero slope. Low points which are subject to solids accumulation shall be avoided.

2.5.4 Depth:

The raw wastewater and effluent reuse force mains shall be designed with a minimum depth of 3.5 feet of cover over the top of the pipe, unless otherwise approved by the Agency. A 4-inch thick by 2-foot wide non-reinforced concrete cap shall be provided above the force main if the minimum depth of cover required cannot be maintained.

2.5.5 Termination:

Force mains shall be extended only as far as the closest gravity sewer. Force mains shall discharge to private manholes as shown in Standard Drawing SD-10 where feasible. The private manholes shall then discharge to private gravity sewers which in turn shall discharge to new public manholes along the sanitary sewer main. Where site conditions do not permit the installation of private manholes and private gravity sewers and where approved by the Agency, force mains may discharge directly to public sanitary sewer mains at new manholes as shown in Standard Drawing SD-11. Only one set of dual force mains shall be connected to a manhole. This manhole shall be configured to reduce turbulence, minimize odor release and control erosion from the incoming force main flow. Manholes receiving discharges from force mains shall be provided with corrosion protection in accordance with Agency requirements.

2.5.6 Discharge Pipe:

a. Station discharge piping shall be a minimum of 2 feet higher than the pump discharge.

b. The discharge pipe shall conform to Section 4.8.

c. If required by Agency, pressurized cleanouts as shown in Standard Drawing SD-36 shall be provided every 400 feet along force mains.

2.5.7 Design Pressure:

The force main and fittings, including reaction blocking, shall be designed to withstand normal pressure, pressure surges (water hammer), and total (active and passive) earth loads.

2.5.8 Aerial Crossings:

Force mains used for aerial crossings shall meet applicable requirements of Section 2.2.22.b.

2.5.9 Hydraulic Losses:

Friction losses through force mains shall be based on the Hazen-Williams formula. For the Hazen-Williams formula, "C" equaling 150 shall be used for new PVC or HDPE force main pipe and “C” equal 120 for older pipe. Turbulent (“minor”) losses at fittings, bends and valves shall be determined in a similar manner. The Engineer shall submit hydraulic calculations for force mains at “C” = 150 and “C” = 120 to demonstrate the performance of force mains at start-up and after extended service.

2.5.10 Thrust Blocks:

Where required by the Agency, thrust blocks shall be included as necessary to secure the force main from movement. Generally, such locations are those where fittings are provided to change the direction of the force main, either horizontally or vertically. Thrust blocks shall be in accordance with the Uniform Design and Construction Standards for Potable Water Systems, latest edition, UDACS Plate No. 31. Concrete for thrust blocks shall conform to Section 4.11.2. The Engineer shall contact the Agency as soon as is practical in the design process to review the Agency’s requirements for pipe thrust restraint. The Engineer shall submit to the Agency for review alternative pipe restraint designs for those locations where the Engineer believes that thrust blocks will not perform satisfactorily and for those locations where the Agency does not permit the use of thrust blocks.

2.5.11 Effluent Reuse Pipe Lines:

All pipe that is used for effluent reuse shall be purple in color if PVC pipe, or extruded with purple stripes at 120-degree points along the pipe, and shall conform to the AWWA reuse standards.

DESIGN AND CONSTRUCTION STANDARDS

SECTION 3

CONSTRUCTION STANDARDS

TABLE OF CONTENTS

CONSTRUCTION STANDARDS

SECTION 3

Section	Description	Page No.
3.1	Standard Specifications	3-1
3.2	Contractor's License	3-1
3.3	Contractor's Responsibility	3-1
3.4	Right-of-Way Encroachments	3-2
3.5	Job Start Check List	3-2
3.6	Cut Sheets	3-2
3.7	Certifications of Installation Procedures	3-3
3.8	Grade Lines	3-3
3.9	Construction Staking	3-4
3.10	Record Drawings	3-4
3.11	Bypass Pumping	3-4
3.11.1	Prohibition Against Sanitary System Overflows	3-5
3.11.2	Pumping Equipment	3-5
3.11.3	Use of New Sanitary Sewers	3-5
3.11.4	Noise Attenuation	3-5
3.11.5	Bypass System Capacity	3-5
3.11.6	Odor Control Requirements	3-6
3.11.7	Bypass System Power Source	3-6
3.11.8	Bypass System Traffic Protection	3-6
3.11.9	Bypass System Maintenance and Operation	3-7
3.11.10	Agency Notice of Operation	3-7
3.12	Agency Pipeline Encroachment - Blasting	3-7
3.12.1	Contractor Responsibility for Blasting	3-7
3.12.2	Blasting Plan	3-7
3.12.3	Existing Facility Inspection	3-8
3.12.4	Blaster Qualifications	3-8
3.12.5	Agency Representation	3-9
3.12.6	Blasting Monitoring	3-9
3.12.7	Independent Blasting Consultant	3-9
3.12.8	Blasting Plan Modifications	3-9

3.13 Earthwork 3-9
3.13.1 Excavation 3-10
3.13.2 Dewatering 3-11
3.13.3 Pipe Bedding 3-11
a. Pipe Bedding (Rigid Pipe) 3-11
b. Pipe Bedding (Flexible Pipe) 3-12
3.13.4 Pipe Zone Backfill 3-13
a. Pipe Zone Backfill (Rigid Pipe) 3-13
b. Pipe Zone Backfill Operations (Flexible Pipe) 3-13
3.13.5 Trench Backfill 3-15
a. Trench Backfill (Subdivision and Unpaved Areas) (See Standard Drawing No. SD-16) 3-15
b. Trench Backfill (Paved Areas, Street R/W 60' or less) (See Standard Drawing SD-17) 3-15
c. Trench Backfill (Paved Areas, Street R/W Greater Than 60') (See Standard Drawing SD-18) 3-15
d. Trench Backfill Within State Right-of-Ways 3-16
e. Granular Backfill 3-16
f. Selected Backfill Material / Subdivisions 3-16
3.14 Pipe Installation 3-16
3.15 Soil Testing 3-19
3.16 Manhole and Cast-in-Place Structure Installation 3-19
3.16.1 Manhole Base Construction 3-20
3.16.2 Assembling Pre-Cast Concrete Manhole Components 3-20
a. Pre-Cast Manhole Sections 3-21
b. Grade Ring Joints 3-21
c. Final Manhole / Structure Adjustment 3-21
3.16.3 Cast-in-Place Concrete Structures 3-21
3.16.4 Pipe Connection Installation 3-22
3.16.5 Frame and Cover Installation 3-23
3.16.6 Exterior Waterproofing 3-23
3.16.7 Excavation and Backfilling 3-23
3.16.8 Corrosion Protection (as required by Agency) 3-23
a. Manhole Corrosion Protection – Factory-Installed PVC Lining Systems 3-24
b. Manhole and Cast-in-Place Structure Corrosion Protection - Field Applied Coating Systems 3-24
3.16.9 Debris Trap 3-25
3.16.10 Odor Control Equipment 3-25
3.17 Lateral Sewer Connections 3-26
3.17.1 Lateral Connections to New Sewers 3-26
3.17.2 Lateral Connections to Existing Sewers 3-26
3.17.3 Damage to Existing Sewers During Lateral Connection Installation 3-27

3.17.4 Tapping VCP, NRCP or ACP Mains 3-27
3.17.5 Tapping RCP, CIP or DIP 3-28
3.17.6 Tapping PVC and HDPE 3-28
3.18 Abandonment of Existing Facilities 3-28
3.18.1 Main Lines and Laterals 3-28
3.18.2 Manholes 3-30
3.19 Testing 3-31
3.19.1 Initial Sanitary System Construction Acceptance (Initial Acceptance) of Gravity Sewers and Appurtenances 3-31
a Low-Pressure Air Testing 3-31
b Manhole Visual Inspection and Corrosion Protection Holiday Testing 3-32
c Sewer Cleaning 3-33
d Deflection Testing 3-33
e Sewer Televising 3-34
3.19.2 Initial Sanitary System Construction Acceptance (Initial Acceptance) of Force Mains 3-35
a General 3-35
b Test Pressure 3-35
c Procedure 3-35
d Allowable Leakage 3-36
e Repairs 3-36
f Backfill Procedure After Test 3-36
3.19.3 Initial Sanitary System Construction Acceptance (Initial Acceptance) of Pump Stations 3-36
a Corrosion Protection Holiday Testing 3-36
b Start-Up 3-37
3.20 Final Acceptance 3-37
3.20.1 Final Acceptance Testing 3-37
3.21 Occupancy Permit Guidelines 3-38
3.21.1 Major Requirements 3-39
a Lines Tested 3-39
b Density Failures 3-39
c Cleaning Sewers 3-39
d Deflection Testing 3-39
e Televising Sewers 3-40
3.21.2 Minor Requirements 3-40
a Manhole Grouting 3-40
b Adjusting Manholes 3-40
3.21.3 Completion Guarantee in Emergency Situations 3-40

SECTION 3

CONSTRUCTION STANDARDS

3.1 STANDARD SPECIFICATIONS

Wherever the words "Standard Specification" appear on the plans or in these Standards, they shall refer to the most current Standard Drawings and Specifications for Public Works Construction Off-site Improvements, Clark County, Nevada, as amended. Unless otherwise specified herein, the "Standard Specifications" shall apply. In addition, specifications from other national agencies have been referenced where applicable. Should the Engineer or Contractor discover any conflict among The Construction Documents, these Standards, or the reference standards cited, that conflict shall be resolved in accordance with Section 1.4.

3.2 CONTRACTOR'S LICENSE

The Agency requires that all contractors installing public interceptor sewers, public collector sewers and private collector sewers, sanitary laterals, pump stations, force mains, and appurtenant above ground and underground structures have the proper "Class A" license, per the Nevada State Contractor's Board, to do this type of construction.

3.3 CONTRACTOR'S RESPONSIBILITY

The Contractor shall have at least three copies of the approved Construction Documents, including three bound copies of these Standards, available at all times at the project site for use by the Contractor’s work forces and the Agency Representative. The Contractor shall perform all construction work in conformance with the approved Construction Documents and these Standards and shall not perform any work that does not conform. The Contractor shall notify the Agency of any deviations from these Standards, including reference standards, that the Contractor discovers in the approved Construction Documents or deviations from the existing conditions depicted in the Construction Documents that the Contractor finds during field activities as soon as those deviations are discovered and prior to construction of the Project elements affected by the deviations. All changes in the Project design necessitated by the deviations identified shall be made by the Engineer and approved by the Agency prior to construction of the affected Project elements.

As the work progresses, the Engineer or Contractor, as appropriate, shall advise the Agency in writing of any additions, deletions or changes to the Work described in the approved Construction Documents or these Design Standards that it desires to make prior to performing these additions, deletions or changes. Such additions, deletions or changes shall be made by the Engineer and so noted in revised Construction Documents. Revised documents shall be submitted to the Agency for review and approval. The Agency is under no obligation to approve the desired additions, deletions or changes. The Agency will conduct its reviews in the normal course of its reviews of other Projects is under no obligation to expedite its reviews to meet desired Project construction schedules. The Agency is not responsible for any cost of delay to the construction for reviewing the desired additions, deletions or any additional costs of construction due to its reviews or acceptance, modification or rejection of the desired additions, deletions or changes

The horizontal and vertical locations of existing sewers, other Agency utilities and other utilities/site-objects, if any, shown in Agency records have been obtained from available

records which may or may not be accurate. As such, the Agency makes no guarantee, expressed or implied, that the existing sewers, other utilities and/or site objects are in the locations shown in Agency records nor shall the Agency bear any costs whatsoever associated with redesign or relocation of Project facilities caused directly or indirectly by the differences between the actual locations of existing sanitary sewers, other utilities or site objects and the locations of those sewers/utilities/site-objects depicted in Agency records. Accordingly, the Developer, Engineer and/or Contractor as appropriate shall bear the full risk and responsibility to confirm the locations of the existing sewers or other utilities, if any, to which the Developer will connect its Project facilities or other existing utilities/site objects that may interfere with construction of those facilities.

The Agency shall not waive the requirements of these Design Standards, the reference standards cited in these Design Standards or the approved Construction Documents to accommodate the failure of the Developer, Engineer and/or Contractor to accurately locate existing utilities or other site objects prior to the start of construction.

3.4 RIGHT-OF-WAY ENCROACHMENTS

Contractor is required to comply with any restrictions imposed by encroachment permit from State, County or City, if that situation arises in the context to which these Standards apply.

3.5 JOB START CHECK LIST

The following shall be completed prior to the commencement of construction:

1. Approved Construction Documents - including all drawings required per Section 2.3.5 and other Sections of these Design Standards
2. Construction Schedule
3. Shop drawings (if any) submitted and approved
4. Bypass pumping plan submitted and approved
5. Blasting plan submitted and approved
6. Site Storm Water Management Plan with Best Management Practices to be implemented.
7. Cut Sheets
8. Soils Report
9. Select Backfill Materials Analysis
10. Off site Permit-with a copy submitted to the Agency
11. Barricade Permit-with a copy submitted to the Agency
12. Encroachment Permit-with a copy submitted to the Agency
13. Project Completion Bonds
14. All easements granted to the Agency and recorded
15. All materials certifications required in these Design Standards
16. Other information requested by the Agency

3.6 CUT SHEETS

No work shall commence on any Project components requiring a profile until cut sheets are submitted to and approved by the Agency's Representative. The cut sheets shall be

prepared under the supervision of a Nevada Professional Land Surveyor (NPLS) or Nevada Licensed Professional Engineer (PE). All cut sheets shall be signed and stamped by the NPLS and/or PE. Cut sheets shall match the approved drawings and other Construction Documents and shall show at a minimum the following:

1. Stationing
2. Hub elevations
3. Invert elevations
4. Cuts
5. Direction and distance of offset
6. Street names
7. Job title
8. Date of preparation
9. Bench mark data
10. Names of surveyors
11. Manholes with stations
12. Top manhole elevations

3.7 CERTIFICATIONS OF INSTALLATION PROCEDURES

The Contractor shall furnish to the Agency its affidavit (certification) and an affidavit (certification) from the pipe manufacturer (or their designee) each verifying that the Contractor's superintendent, on-site foreman and lead pipe layer engaged in the work have been trained by the pipe manufacturer in the manufacturer's recommended installation methods prior to the start of work. Affidavits (certifications) verifying that the above designated personnel have received the necessary training for previous Projects is acceptable, provided that training was provided within one year previous to the start of the subject Project. For the first day of pipe installation/backfilling for all pipe sizes and for one additional day for each 2000 feet (or increment thereof) of installation of HDPE pipe of all diameters and other pipe materials 48-inch diameter or larger, the Contractor shall engage the services of a qualified representative of the pipe manufacturer to observe pipe installation and backfill procedures. The pipe manufacturer's representative shall provide an additional affidavit (certification) that the installation/backfilling procedures he/she observed were in general conformance with the pipe manufacturer's recommendations. The Contractor shall notify the Agency in writing at least two working days prior to the days on which the pipe manufacturer's representative shall be present at the work site to observe pipe installation.

3.8 GRADE LINES

For straight runs of sewer, hubs/batter boards shall be provided at manholes and changes in vertical and/or horizontal alignment as a minimum. A laser shall be used to establish the grade lines between the manhole and alignment change hubs/batter boards on straight sewer segments. Additional hubs/batter boards spaced as specified in Section 3.9 shall be used to establish grade lines on curvilinear sewer segments. Prior to laying any pipe, the grade lines shall be established in the trench bottom at the designated grades and thickness of pipe bedding required. Pipe bedding shall be carefully graded such that the pipe when installed shall be true to line and grade within 0.05 feet for pipe 12-inches in diameter or smaller and within 0.10 feet for pipe larger than 12-inches.

3.9 CONSTRUCTION STAKING

At its option, Contractor may use a station/offset system or a coordinate system for locating improvements for construction. This locating system shall be shown on the Construction Drawings approved by the Agency. The offset, station and cut or X/Y/Z coordinates matching the approved Construction Drawings shall be printed at each hub. Hub spacing shall not exceed 10 feet to 25 feet on curved sewers, as determined by the Agency depending on the radius of the curve; and, 10 foot intervals in intersections with heavy traffic conditions, unless unusual field conditions require additional staking to assure accurate placement of the new sewer in accordance with the approved Construction Documents and the tolerances specified in Section 3.8. Contractor shall replace damaged or lost hubs prior to construction of sewer segments and sewer appurtenances in the immediate vicinities of such hubs. Hubs shall remain in place at least until the sewer segments in the vicinities of the hubs are installed, backfilled, inspected, and successfully tested.

3.10 RECORD DRAWINGS

Record drawings showing the horizontal and vertical locations of mainline sanitary sewers, sanitary sewer laterals and other sewer system appurtenances as they were actually installed shall be submitted to the Agency prior to and as a condition of the Agency's initial acceptance of the new sanitary sewer system and before sanitary wastewater is introduced to the new sanitary sewers. Horizontal and vertical locations shall be referenced to permanent benchmarks in the Project area. Record drawings shall be submitted with two weeks of completion of the work including final testing. Record drawings shall include as a minimum: distances between manholes, lateral locations (by station from the downstream manhole and offset from the centerline of the sewer) at the connection to the mainline sewer and at the property line, any alignment changes from the approved Construction Documents, and all utilities crossing the new sewer or lying parallel within 20-feet of the new sanitary sewer. Protection methods for water mains crossing or adjacent within 10-feet to the new sewer shall also be shown. Record drawings shall be reproducible mylar of good quality such that all information is clearly readable, without dark spots, loss of information, or blurring. Revised plots of the original drawings are preferred.

3.11 BYPASS PUMPING

Contractor shall provide a detailed written plan, drawings and other documentation as necessary presenting any proposed bypass pumping operations for review and approval to the Agency at least 30 calendar days prior to the commencement of bypass pumping operations. The bypass pumping plan, drawings and documentation shall be prepared by a Nevada Licensed Professional Engineer and shall be so certified where appropriate on the submittals to the Agency. Data regarding the elevations and locations of existing sewers and new sewers affected by the bypass pumping operation shall be field-verified by a Nevada Professional Land Surveyor. The bypass pumping plan shall indicate the maximum wet-weather flow rate expected in the existing sewer from which flows are to be bypassed and the procedure used for determining that maximum rate. In addition, the plan shall indicate the peak hydraulic capacity of that existing sewer flowing full, but not surcharged. The bypass pumping plan shall also indicate the location of pumps, pump sizes, suction and discharge pipe sizes, suction/discharge pipe locations, manhole locations where flows are intercepted and discharged, odor control provisions, pumping system site protection provisions, noise control provisions, general operating provisions, emergency operating provisions and operating schedule. The plan shall also list the primary individual in charge

of operations and additional lead personnel who shall be on site when the primary individual is away not present, together with 24/7 emergency telephone numbers for the on-site operators, Contractor's site superintendent, developer and other individuals who may need to be contacted in case of bypass pumping system operational issues. In addition, the bypass pumping system shall also meet the following requirements as a minimum:

3.11.1 Prohibition Against Sanitary System Overflows:

Contractor shall provide all materials and labor as necessary to maintain flows in the existing sewer and tributary main sewers and laterals at all times and under all weather conditions. Interruption of flows is not permitted. Overflows from bypass operations shall not be permitted to directly or indirectly enter any streams or bodies of water. The Contractor shall be solely responsible for any legal actions taken by the state regulatory agencies and/or others if such overflows occur during construction. Contractor shall immediately contact the Agency, state regulatory agencies and others as appropriate should a sanitary sewer overflow occur, regardless of the flow rate or flow volume discharged.

3.11.2 Pumping Equipment:

Bypass pumping equipment shall include pumps, conduits, motors/engines, and all related equipment necessary to divert the flow or sewage around section in which work is to be performed. The Contractor shall promptly repair or replace the failed equipment to the satisfaction of the Agency's Representative.

3.11.3 Use of New Sanitary Sewers:

The new sewer line may be used by the Contractor to carry the sanitary flow after the new pipe has passed inspection and testing. Any "temporary" connections to the new sewer line and "restoration" of the new sewer line to the configuration required in the Construction Documents following completion of bypass pumping operations shall be approved by the Agency's Representative.

3.11.4 Noise Attenuation:

Engine driven equipment for bypass pumping equipment, power generation or air compression shall have sound attenuating "critical grade mufflers" to limit noise from these combined noise sources when they are in normal operation to a maximum of 50 decibels at a distance of 100-feet from the individual unit producing the greatest amount of noise. If equipment is operated between the hours of 8:00 PM and 6:00 AM, this equipment shall also be provided with sound attenuation enclosure consisting of a three sided enclosure with roof constructed of 2 by 4 frame with ½-inch plywood sheathing and 2-inch Styrofoam panels attached to the inside of the entire enclosure. The enclosure shall be portable in order to allow the enclosure to be moved when bypass pumping equipment is moved.

3.11.5 Bypass System Capacity:

The bypass system shall be capable of transporting 1.5 times the maximum wet-weather flow expected within the existing sewer or 125-percent of the full pipe capacity of the existing incoming sewer, whichever is greater. The system shall

include 100-percent redundant pump capacity, together all necessary appurtenances required to put the redundant pumps into operation sufficiently quickly to prevent building flooding or surface overflows from the tributary sanitary sewer system, should there be a failure in the primary bypass pumping system. The bypass pumping plan shall present the necessary hydraulic information and calculations to demonstrate that the proposed bypass pumping system and redundant pumping system have the capacity required, considering static head, dynamic head, pipe friction losses, minor hydraulic losses, and other system anomalies. Bypass system piping shall be pressure-tested with water in the presence of the Agency Representative at least two work days prior to the commencement of pumping operations. The test pressure shall be twice the maximum operating pressure of the bypass pumping system or 50 psi, whichever is greater. The bypass system piping shall maintain at least 90-percent of the test pressure for a minimum of two hours after initial pressurization and there shall be no visible leaks from the system during the test or at any other time.

3.11.6 Odor Control Requirements:

The bypass pumping system shall be equipped with both gas-phase and liquid-phase odor control systems as necessary to prevent nuisance odors from escaping the pumping or sewer construction operations. Odor control systems shall be placed at both the pump suction and force main discharge locations. Details of these odor control systems shall be included in the bypass pumping plan and supporting documentation submitted to the Agency. The Contractor is cautioned that hydrogen sulfide, methane, and other potentially hazardous and/or explosive gasses or other materials may be present in existing or new sanitary sewers. There also may not be sufficient oxygen in the sanitary sewer system to support life. Therefore the Contractor is advised to take suitable precautions to protect its work forces and the general public from exposure and shall provide odor control and other systems as necessary for such conditions.

3.11.7 Bypass System Power Source:

The bypass pumps may be directly engine driven or may be electrically powered, either by drops from local public utility system or by a dedicated generator system. Pumps placed in the sanitary sewers shall be of explosion-proof configuration. In the case of direct engine driven pumps, the redundant pumps shall also be direct engine driven by their own independent power units. In the case of electrically driven pumps, whether powered from the public utility or dedicated generators, a second independent generator system of equal power output capacity shall be provided in case of power failure and the bypass pumping system shall equipped for quick switch-over to the back-up generator. Electrical power systems shall be explosion-proof and waterproof.

3.11.8 Bypass System Traffic Protection:

The bypass pumping system shall be protected from damage by construction equipment, passing vehicular traffic and vandalism. Suitable traffic warning and directional control devices shall be placed where required to keep both construction and non-construction traffic away from the bypass pumping system and its appurtenances. Bypass system piping that may be exposed to vehicular

traffic shall be capable of withstanding a directly-applied HD-20 loading with an impact factor of 2.0. Pumping system and piping protection methods to be utilized shall be presented in the bypass pumping plan.

3.11.9 Bypass System Maintenance and Operation:

The bypass pumping system shall be maintained by qualified operating personnel, of which at least one individual shall be present on site at all times that the system is in operation. These operating personnel shall be capable of operating, maintaining, repairing, refueling or otherwise keeping the bypass pumping system in full operation at all times. These operating personnel shall inspect the system, including piping, at least once per hour while the bypass pumping system is in operation and shall maintain a log of said inspections, documenting system functions, malfunctions, general maintenance performed and emergency maintenance performed. This log shall kept up-to-date for each daily work shift and shall be readily available to the Agency for review.

3.11.10 Agency Notice of Operation:

The Contractor shall notify the Agency of its intention to begin bypass pumping not less than two work days prior the start of pumping operations. Further, the operation of the bypass pumping system shall not be initiated until work is ready to commence on the construction of the sanitary sewer improvements for which bypass pumping is required. In addition, operations shall not commence on a Friday unless week-end construction work is planned, nor shall pumping system operations commence on the days prior to holidays or other traditional non-work days.

3.12 AGENCY PIPELINE ENCROACHMENT - BLASTING

Prior to actual blasting, all non-explosive means of excavation must be explored and shall be utilized if found feasible. When blasting within 200 feet of any Agency sewer main or other facilities, the following are required:

3.12.1 Contractor Responsibility for Blasting:

The Contractor is solely responsible for any damage to existing facilities, the new Work, the Contractor's forces and the general public caused by its blasting operations, including temporary or permanent loss of use. The blasting requirements presented in this Section 3.12 represent the minimum requirements for conducting blasting operations. The Contractor shall implement these requirements and all other measures it deems necessary to fully protect all existing facilities, the new Work, its work force, its equipment and the general public from blasting operations. All parties associated with blasting operations shall also comply with all applicable federal, state, and local regulations.

3.12.2 Blasting Plan:

The Contractors shall submit a written blasting plan to the Agency's Representative at least thirty days before blasting commences. The Agency will review the parameters of the blasting plan. The Agency's review, review comments or lack of

comments on this blasting plan shall not relieve the Contractor of its sole responsibility to fully protect all existing facilities, the new Work, the contractor's work force, the Contractor's equipment and the general public from harm from the Contractor's blasting operations. The blasting plan shall include the following information at a minimum:

a. Explosive type

b. Delay types and intervals

c. Delay pattern

d. Maximum shot hole depth and diameter

e. Hole spacing

f. Drilling Pattern – Show plan view and profile in relation to Agency facilities. The drilling pattern and initiation procedure shall provide the greatest relief possible in a direction away from any Agency pipeline and must minimize vibration and ground movement. The use of stress relieving trenches may be required by the Agency.

g. Maximum charge per hole

h. Maximum Charge Per Delay - No more than one charge shall be fired during each delay period.

i. Type of protective blasting mat used, if any and method of placement

j. Other information the Contractor believes is pertinent to the blasting operation

3.12.3 Existing Facility Inspection:

Existing sanitary and storm sewers within 200 feet of the proposed blasting zone shall be televised prior to blasting to determine the current condition of those sewers. Within fourteen calendar days following the completion of blasting operations, these existing sanitary and storm sewers shall be re-televised to determine if they have been damaged by blasting operations. Televising shall be done in accordance with the requirements of Section 3.19.1.e. Any damage to these storm sewers and/or sanitary sewers discovered through comparison on the pre- and post-blasting televising shall be repaired by the Contractor to the sewer owner's satisfaction at no cost to the Agency.

3.12.4 Blaster Qualifications:

All blasting operations shall be conducted by experienced, trained, and licensed personnel each of whom shall be in good standing with the licensing entities, including the State of Nevada. Documentation of licensed blasters shall be provided to the Agency's Representative prior to any blasting.

3.12.5 Agency Representation:

Blasting shall be done only with the Agency's Representative present.

3.12.6 Blasting Monitoring:

The Contractor shall supply a seismograph and qualified operator, jointly acceptable by both the Contractor and Agency's Representative, at Contractor's expense. Seismograph readings taken over the Agency's affected pipelines and facilities shall be recorded for each blast. Results shall be provided to the Agency's Representative after each blast. A peak particle velocity of 2 inches per second shall not be exceeded at any Agency facility. Peak particle velocities shall be recorded in the longitudinal, transverse, and vertical directions.

3.12.7 Independent Blasting Consultant:

The Agency has the right but not the duty to require an independent blasting consultant based upon the Contractor's proposed blasting procedures presented in the blasting plan submitted for Agency review. The expense for this consultant shall be borne by Contractor.

3.12.8 Blasting Plan Modifications:

Any deviation from the blasting plan reviewed by the Agency shall require additional review by the Agency. In the event the plan's peak particle velocities are exceeded, the Contractor shall be liable to pay the full cost of inspecting the Agency's facilities outside the 200-foot limit and the cost of any repairs and/or facility replacements resulting from such occurrence, as well as any other costs directly resulting from such occurrence.

Compliance with the preceding requirements does not express or imply that the Contractor, its subcontractors, blasters, consultants or any other associated party is relieved of any responsibility or liability in the event any of the Agency's facilities or other property in the Project area are damaged in any way before, during, or after blasting operations. The Agency will hold all parties responsible for costs incurred for any breach of integrity of Agency pipelines other Agency facilities, or other utilities/site-objects in the vicinity of blasting operations.

3.13 EARTHWORK

The Contractor shall perform all earthwork required for construction of all facilities, pipelines, and appurtenances as specified or shown on the drawings, including clean-up as required. Excavation for appurtenant structures, such as manholes, inlets, transition structures, junction structures, vaults, valve boxes, catch boxes, catch basins, pump stations, lift stations and other facilities, shall be deemed to be in the category of excavation Density values specified in the following subparagraphs shall be Modified Proctor densities per ASTM D 1557. During any construction activity, such as, but to limited to: grading, excavating, construction of new facilities, adjustment of grade rings for new pavement, or any other construction activity that exposes an operational sanitary or storm sewer system, the Contractor shall install exterior/marine grade plywood bulkheads in the upstream and downstream sanitary and/or storm sewer to prevent debris from entering the piping systems

during construction activities. Any debris that accumulates in the sewer shall be removed and the bulkheads shall be removed at the end of each day's construction such that the sanitary and storm systems are returned to normal operational condition. Additional protection shall be placed around any open excavations adjacent to exposed operational sanitary and/or storm sewers to prevent debris from falling into the sanitary and/or storm sewer, including storm water runoff. This protection shall remain in place until the excavation is backfilled.

3.13.1 Excavation:

a. Excavations, including the manner of supporting excavations and provisions for access to trenches, shall conform to applicable State Industrial Safety requirements and Federal Occupational Safety and Health Act (OSHA) requirements. The excavation support is an integral part of the Contractor's means and methods of construction. The Contractor shall submit to the Agency a certification that the excavation support has been designed by a Nevada Licensed Professional Engineer. In the initial phase of excavation support installation and periodically thereafter, but no less often than one full work day monthly, the Engineer who designed the excavation support shall visit the work site to review the excavation support installation and shall provide a certification to the Agency after each visit that the excavation support is being installed and utilized in general conformance with his/her design.

b. Excavation shall include the removal of all materials of whatever nature encountered, including all obstructions of any nature that would interfere with proper execution and completion of the work. The Contractor shall furnish all equipment, materials and supplies that may be required for the excavation, and all pumping, ditching, or other measures for the removal or exclusion of water, including storm and waste water reaching the site of the work from any source so as to prevent damage to the work or adjoining property.

c. Excavation for pipeline shall be open-cut trenches with vertical sides up to 1-foot above the top of the pipe as shown in Standard Drawing SD-15, unless otherwise shown in the Construction Documents or provided herein. Excavation from 1-foot above the top of the pipe to the ground surface shall be in accordance with Standard Drawings SD-16, SD-17, and SD-18 and the Contractor's method of trench wall support which shall conform to State Industrial Safety and OSHA requirements. The bottom of the trench shall have a minimum width of pipe outside diameter plus 16-inches and a maximum width as recommended by the Uni-Bell PVC Pipe Handbook (if applicable) and pipe manufacturer but not greater than pipe outside diameter plus 36-inches. Compaction of foundation, bedding, haunching and initial backfill shall extend to the trench wall.

d. Whenever the excavation is made below the grade shown on the drawings, the trench shall be backfilled to the required grade with suitable material (one inch minus), and said material shall be brought to optimum moisture content and compacted by mechanical means to a minimum of 90 percent of maximum density in layers not exceeding 6 inches in thickness.

e. Excess material and excavated material determined unsuitable for backfill by the Agency's Representative shall be removed from the site of the work by the Contractor at its own expense

f. The Contractor shall provide a uniform, stable base to the grade shown on the plans or to the minimum depth required.

g. Where an unstable or running soil condition is encountered in the trench wall, such as may be found by excavation below groundwater, this condition shall be stabilized by an approved material before laying the pipe.

h. For manholes, valves, inlets, catch basins, and other appurtenances, the Contractor may excavate to place the concrete structure directly against the excavated surface, provided that the faces of the excavation are firm and unyielding and are at all points outside the structure lines shown on the plans. If the native material is such that it will not stand without sloughing or if pre-cast structures are used, the Contractor shall over-excavate to place structure and this over-excavation shall be backfilled as required for the adjoining pipeline and compacted to a minimum of 90-percent of maximum density.

3.13.2 Dewatering:

To stabilize the excavation when groundwater is encountered, the Contractor shall lower and maintain groundwater levels distance of at least 2-feet below the bottom of the excavation at its lowest point at all times the excavation is open, including non-work periods. Dewatering for structures and pipelines shall commence when groundwater is first encountered and shall be continuous until such times as water can be allowed to rise in accordance with the following provisions. Dewatering shall be conducted such that no concrete footings or floors or pipelines are placed in water nor shall water be allowed to rise over them until the concrete or mortar has set at least 24 hours. Water shall not be allowed to rise unequally against the walls until design strength is achieved or for a period of 28 days nor shall water be allowed to rise in pipeline trenches or drained excavations until pipelines or facilities are backfilled or restrained to prevent flotation. Under no conditions shall groundwater be allowed to enter into the existing sanitary sewer system. All dewatering costs shall be borne by the Contractor.

3.13.3 Pipe Bedding:

The gradation and classification of backfill materials are provided in Table "H".

a. Pipe Bedding (Rigid Pipe)

1. Bedding, in accordance with this section and Standard Drawing SD-15, shall be required where conditions of unstable trench bottom, over-excavation, or rocky foundation are encountered. Bedding is also required to provide support necessary to develop the design supporting strength of the pipe.

2. Bedding material, Type II or other Agency-approved material, shall provide a uniform and continuous support beneath the pipe at all points between bell holes or pipe joints. All loose material in excess of two inches in diameter shall be removed from the bottom of the trench and fill material beneath the pipe compacted to a minimum 90 percent of maximum density. If approved native material is not used for bedding, the Contractor shall provide a copy of the material delivery ticket from an Agency-approved source for the imported bedding material utilized.

3. Where rocky or unyielding foundation material is encountered, subgrades shall be excavated to remove protruding rocks and a minimum 6 inch bedding of Type II material provided compacted to a minimum of 90 percent of maximum density.

4. Concrete Cradles, Arches, Encasement:

   Pipe that is to be bedded in a concrete cradle or encased in concrete shall be placed in proper position on temporary supports consisting of concrete block or bricks. When necessary, the pipe shall be rigidly anchored or weighted to prevent flotation when the concrete is placed.

   Concrete for cradles, arches or encasement shall be placed uniformly on each side of the pipe. Concrete placed beneath the pipe shall be sufficiently workable so that the entire space beneath the pipe can be filled without excessive vibration.

5. Where groundwater is found to be present above the bottom of the trench, dams shall be constructed in the bedding material in accordance with Section 3.14 to limit the movement of groundwater through the bedding material.

6. During backfill, sufficient bedding material shall be placed around the pipe and compacted to hold the pipe to the designed alignment during subsequent pipe jointing and backfilling operations.

b. Pipe Bedding (Flexible Pipe):

1. The pipe shall be bedded to line and grade with uniform and continuous support for a firm base. Blocking shall not be used to bring the pipe to grade.

2. When the pipe being installed is provided with elastometric seal joints, bell holes shall be excavated in the bedding material to allow for unobstructed assembly of the joint. Care shall be taken that the bell hole is no larger than necessary to accomplish proper joint assembly. When the joint has been made, the bell hole shall be carefully filled with bedding or haunching material to provide for adequate support of the pipe throughout its entire length.

3. All other provisions for bedding of rigid pipe as set forth in Section 3.13.3.a shall also apply.

3.13.4 Pipe Zone Backfill:

The compaction of pipe backfill materials within the pipe zone shall be by mechanical means only, jetting or flooding shall not be allowed. The pipe zone of the trench is defined as the full width of the trench excavation from the top of the compacted pipe foundation to the elevation 12 inches above the outside top of the pipe bell. See Standard Drawings SD-16, SD-17 and SD-18.

a. Pipe Zone Backfill (Rigid Pipe)

1. Unless otherwise specified, after the pipe is laid, the pipe zone shall be backfilled with Type II material, sand, or crushed rock (refer to Table “H”) and compacted in at least two equal lifts for pipe 24 inches and larger and one lift for pipe smaller than 24 inches to a minimum of 12 inches, maximum of 24 inches, above the top of the pipe. Below the springline of the pipe, the backfill material shall be placed in such a manner that it is uniformly compacted around the pipe.

2. The partially backfilled trench shall be compacted to not less than 90 percent of maximum density in the pipe zone. Adequate sumps and pumping shall be provided, as determined by the Agency's Representative, for removing excess water from the trench. Any water in a partially backfilled trench shall be allowed to completely drain away before the remaining backfill is placed.

3. The selection and use of mechanical compaction equipment shall be made with care so that the pipe will not be disturbed or damaged. In no case shall compaction equipment make direct contact with the pipe. A minimum of 12 inches of cover is required above the pipe when handheld compaction equipment is utilized. Heavy compaction equipment shall not be permitted to operate directly above the pipe until a minimum of 3 feet of cover is achieved for concrete pipe and 3 feet of cover for vitrified clay pipe.

4. Where groundwater is found to be present above the bottom of the trench, dams shall be constructed in the backfill material in accordance with Section 3.14 to limit the movement of groundwater through the bedding material.

b. Pipe Zone Backfill Operations (Flexible Pipe)

1. This section is derived from NSI/ASTM Standard D2321. Where more restrictive standards are recommended by the pipe manufacturer, those shall be used.

2. Wet Conditions - In any area where the pipe will be installed below historic groundwater levels or where the trench could be subject to inundation, crushed rock material shall be placed to the top of the pipe

zone. In the initial stage of placing this type of material, sufficient crushed rock material shall be worked under the haunch of the pipe to provide adequate side support. Precautions must be taken to prevent movement of the pipe during placing of the material under the pipe haunch. Protection of the pipe from large particles of backfill material is required. Where unstable trench walls exist because of migratory materials such as water-bearing silts or fine sand, the loss of side support through the migratory action shall be prevented. Where groundwater is found to be present above the bottom of the trench, dams shall be constructed in the backfill material in accordance with Section 3.14 to limit the movement of groundwater through the bedding.

3. Dry Conditions - In any area where groundwater will not be experienced at any time above the level of the foundation material or where the trench will not be subject to inundation, Type II material or crushed rock (refer to Table “H”) shall be placed in the pipe zone. Type II material or crushed rock (refer to Table “H”) shall be placed to the springline of the pipe and compacted by hand or mechanical tamping. In the initial stage of placing this material, sufficient Type II material or crushed rock (refer to Table “H”) shall be worked under the haunch of the pipe to provide adequate side support. Movement of the pipe shall be prevented during placing of the material under the pipe haunch. The initial backfill material shall be placed in two stages, one to the top of the pipe and the other to a point at least 12 inches over the top of the pipe. Each stage of haunching and initial backfill shall be compacted by handheld compaction equipment to a minimum of 90 percent maximum density.

4. Provide at least 36 inches of cover over the top of the pipe before the trench is wheel-loaded and 48 inches of cover before utilization of hydrohammer during compaction.

5. Avoid contact between the pipe and compaction equipment. Compaction or haunching, initial backfill, and backfill material shall be done in such a way that heavy compaction equipment is not used directly above the pipe until two (2) feet of fill has been placed above the top of the pipe to ensure that heavy compaction equipment will not have a damaging effect on the pipe. Minimum of 12 inches of cover is required above the pipe when handheld compaction equipment is utilized.

6. If sheeting or other trench protection is removed, do not disturb previously constructed foundation bedding, haunching, and initial backfill. If it has been necessary to place or drive sheeting or other trench protection below the top of the pipe, this portion shall be left in place since its removal could jeopardize the side support necessary for "flexible conduits."

3.13.5 Trench Backfill:

Backfill in the pipe trench above the pipe zone shall be as follows unless otherwise required by the governing authority for the installation right-of-way.

a. Trench Backfill (Subdivision and Unpaved Areas) (See Standard Drawing No. SD-16.)

In unpaved areas, backfill above the pipe zone shall be "Selected Backfill" or "Granular Backfill" as specified in Sections 3.13.5.e and 3.13.5.f and Table "H" of these Standards. This backfill shall be placed in horizontal layers not to exceed 2 feet in thickness and shall be compacted to a minimum of 90 percent of maximum density. Where groundwater is found to be present above the bottom of the trench, dams shall be constructed in the backfill material in accordance with Section 3.14 to limit the movement of groundwater through the bedding material.

b. Trench Backfill (Paved Areas, Street R/W 60' or less) (See Standard Drawing SD-17.)

1. In paved areas with right-of-ways of 60 feet or less, backfill above the pipe zone to a level 24 inches below the bottom of the pavement shall be "Selected Backfill" or "Granular Backfill" compacted to not less than 90 percent of maximum density. Compaction shall be by mechanical means. Where groundwater is found to be present above the bottom of the trench, dams shall be constructed in the backfill material in accordance with Section 3.14 to limit the movement of groundwater through the pipe bedding.

2. Backfill material in the 24-inch depth beneath the pavement shall be Type II base aggregate (refer to the Standard Specifications) compacted to not less than 95 percent of maximum density by mechanical means.

c. Trench Backfill (Paved Areas, Street R/W Greater Than 60') (See Standard Drawing SD-18.)

1. In paved areas with right-of-ways greater than 60 feet, backfill above the pipe zone to a level two (2) feet below the bottom of the pavement may be "Selected Backfill" or "Granular Backfill" compacted to 90 percent of maximum density by mechanical means or "CLSM" as specified in subsection 208.02.06 of the "Uniform Standard Specifications For Public Works' Construction Offsite Improvements, Clark County Area, Nevada." Where groundwater is found to be present above the bottom of the trench, dams shall be constructed in the backfill material in accordance with Section 3.14 to limit the movement of groundwater through the bedding.

2. Backfill material in the top two (2) feet of the trench immediately below the bottom of the pavement shall be "CLSM" as specified in Section 4.11.1 and Subsection 208.02.07 of the "Uniform Standard Specifications For

Public Works' Construction Offsite Improvements, Clark County Area, Nevada."

d. Trench Backfill Within State Right-of-Ways

Unless otherwise shown on the drawings or specified, compaction of backfill within Nevada State Department of Transportation (NDOT) right-of-ways shall be performed with mechanical tamping units and the material shall be placed at a rate which will permit efficient use of mechanical tampers in securing the required compaction. Backfill shall be compacted to 90 percent maximum density. Backfill material shall be placed in uniform horizontal layers not exceeding 8 inches in loose thickness before compaction and shall be brought up uniformly on all sides. Each layer of backfill shall be moistened as necessary and thoroughly tamped until 90 percent of maximum density is achieved. Compaction of backfill material by flooding or jetting is not permitted in Nevada State Department of Transportation right-of-ways. Where groundwater is found to be present above the bottom of the trench, dams shall be constructed in the backfill material in accordance with Section 3.14 to limit the movement of groundwater through the bedding. Dams shall be constructed of CLSM per Section 4.11.1 only. Contractor shall otherwise comply with all other requirements imposed by NDOT.

e. Granular Backfill

Material used for granular backfill shall consist of natural sand or a mixture of sand with gravel, crushed gravel or crushed stone. Pea gravel will not be acceptable. Material shall be free of broken concrete or bituminous material, sod, frozen earth, organic materials, rubbish, or debris. Material placed adjacent to structures shall have a water soluble sulfate content of less than 0.3 percent by dry soil weight. Granular backfill material shall conform to the requirements specified in Table "H".

f. Selected Backfill Material / Subdivisions

Material used for selected backfill shall be a quality acceptable to the Agency and may consist of suitable material from excavation. It shall be free of broken concrete, bituminous material, sod, frozen earth, organic materials, rubbish, or debris. The backfill material shall have a sufficient amount of fine material to fill the voids between the coarse aggregate. In addition thereto, the material shall conform to the requirements specified in Table "H".

3.14 PIPE INSTALLATION

Gravity sewer pipe shall be laid in accordance with the latest editions of: ASCE Manual of Practice No. 60, the Uni-Bell PVC Pipe Association Handbook of PVC Pipe, Design and Installation, and the pipe manufacturer’s recommendations. Force mains shall be installed in accordance with AWWA C605 and pipe manufacturer’s recommendations. HDPE shall be installed by contractors certified by the pipe manufacturer. The pipe runs between manholes shall be a single pipe size, pipe material and structural classification.

Pipe shall be laid in finished trenches free from water or debris, and shall be commenced at the lowest point and laid continuously, with the spigot ends pointing in the direction of the flow. Protect the pipe during handling against impact shocks and free fall. Do not permit hooks to come in contact with pre-molded joint surfaces. Handle pipe having pre-molded joint rings or attached couplings so that no weight, including the weight of the pipe itself, will bear on or be supported by the jointing material. Avoid dragging the spigot ring on the ground or allowing it to be damaged by contact with gravel, crushed stone, or other hard surface The internal beads on butt-fusion welded HDPE shall be reamed flush with the interior pipe wall.

After delivery alongside the trench, carefully examine each piece of pipe for soundness and specification compliance. Acceptable pipe may be marked by the Agency's Representative with paint or other permanent marking material. The marks should be plainly visible after installation in the trench and before the pipe is covered.

Clean joint contact surfaces immediately prior to jointing. Use lubricants, primers, or adhesives as recommended by the pipe or joint manufacturer.

Unless otherwise required, lay all pipe straight between changes in alignment and at uniform grade between changes in grade. Excavate bell holes for each pipe joint. When jointed in the trench, the pipe shall form a true and smooth line. Keep trenches dry during pipe-laying. Before pipe-laying is started, remove all water that may have entered the trench.

During construction of new facilities, a debris trap shall be provided in accordance with SD-30 in the first manhole upstream from the existing sewer to which the new sewer will be connected and a plug installed in the outlet pipe of that manhole to prevent debris from entering the existing sanitary sewer. This trap and plug shall remain in place until the new sewer is completed, tested and is ready for transfer to the Agency. The Contractor is cautioned that hydrogen sulfide, methane, and other potentially hazardous and/or explosive gasses or other materials may be present in existing or new sanitary sewers. There also may not be sufficient oxygen to support life. Therefore the Contractor is advised to take suitable precautions to protect its work forces and the general public from exposure and shall provide odor control and other systems suitable for such conditions.

As the new sewer is prepared for final testing, additional trap(s) and plug(s) shall be placed at the downstream end of each sewer segment being cleaned to prevent the discharge of debris to either the existing sanitary sewer or to other downstream segments of the new sewer that have already been cleaned and tested. All debris collected in traps shall be removed prior to removing plugs. Upstream plugs and traps shall be removed once all cleaning and testing upstream of the plugs/traps have been completed.

At times when pipe-laying is not in progress, the open end of the pipe shall be closed with a tight-fitting cap or plug to prevent the entrance of foreign matter into the pipe. These provisions shall apply during the noon hours as well as overnight. In no event shall water that has infiltrated into the trenches be allowed to enter into the existing sanitary sewer system. The pipeline under construction may be used to remove water that has infiltrated into the trenches provided it is removed before entering the existing sanitary sewer system.

When pipe is to be installed at or below the groundwater table and wherever groundwater is encountered whether above or below the groundwater table, water dams shall be installed along the trench through the area of high groundwater at not more than 100-foot intervals,

unless otherwise approved by the Agency. Water dams shall be constructed of a 1-foot nominal thickness of CLSM or a 3-foot nominal thickness of clay compacted to a minimum of 95-percent modified Proctor Density and having a permeability when completed of not more than 0.00001 centimeters per second. Water dams shall extend the full width of the trench and keyed in to the undisturbed trench wall and shall extend from the undisturbed trench bottom to a height equal to top of established water table or 2-feet above top of pipe, whichever is greater.

For curvilinear sewers, the maximum allowable deflection per joint shall be 75-percent of the maximum allowable deflection per joint recommended by the pipe manufacturer.

Installation of new sewer facilities that cross over or under existing utility pipes, sewer mains or laterals, except water mains and water services shall be in accordance with Standard Drawings SD-20 and SD-21. Water main and water service crossings shall be in accordance with UDACS requirements.

Ductile iron pipe and fittings shall be protected with a minimum of 2 layers of 8 mil polyethylene encasement material in accordance with Sections 4.6.2.f and 4.8.5.d as applicable. The overall installation of the encasement and the making of joints between sections of the encasement material shall be in accordance with AWWA C 105, the DIP manufacturer's recommendations and the encasement material manufacturer's recommendations. In case of conflict among these recommendations, the recommendation yielding the greater protection of the ductile iron pipe/fitting shall generally apply. The Agency Representative shall have final authority to determine which individual recommendations or composite of recommendations shall be followed. The encasement shall be installed such that punctures and/or tears are minimized. Minor punctures shall be and tears shorter than 6-inches shall be repaired as recommended by the encasement material manufacturer. Encasements having tears greater than 6-inches shall be removed and replaced. Pipe cover materials shall be placed in a manner that does not puncture or tear the encasement material. The polyethylene encasement materials shall extend a minimum of 3-feet or 3 pipe–diameters, whichever is greater, beyond the ends of DIP pipe or fittings where DIP pipe transitions to non-metallic pipe materials.

Pipe locator ribbon conforming to Section 4.12.1 shall be placed no less than 18 inches nor more than 24 inches above the top of pipe, centered along the entire lengths of public interceptor sewers, public collector sewers and private collector sewers, force mains, effluent reuse lines, and laterals as shown in Standard Drawings SD-15 through SD-18, SD-20, SD-21 and SD-25. A second locator ribbon conforming to Section 4.12.2 shall be placed immediately below raw wastewater and reuse force mains. The metallic component shall be extended into the pump station dry well and the force main discharge manhole at the main gravity sanitary sewer.

Agency approved marker balls conforming to Section 4.12.3 shall be placed above each lateral connection to the main sewer and above the upstream end of each lateral as shown on Standard Drawings SD-22, SD-23 and SD-25. Agency approved marker balls conforming to Section 4.12.3 shall be placed at uniform intervals not exceeding 25 feet above curvilinear sewers and stub-outs. Agency approved marker balls conforming to Section 4.12.4 shall be placed at uniform intervals not exceeding 50-feet and at changes in horizontal or vertical alignment above each force main in dual force main installations. Agency approved marker balls conforming to Section 4.12.4 shall be placed at uniform intervals not exceeding 50-feet and at changes in horizontal or vertical alignment above

pressurized water reuse lines. Where marker balls are installed during project on adjacent or crossing pipilines, the marker balls need to be offset from one other by 25-feet. Where possible, marker balls shall be at least 3-feet below finish grade, but not more than 5-feet below finish grade under any circumstances.

Watertight plugs shall be placed at the ends of all sewer stub-outs and laterals. These plugs shall be restrained from blow-out by concrete thrust blocks at least one cubic foot in volume or other restraining devices approved by the Agency capable of resisting air-pressure testing and sewer maintenance operations. Concrete shall conform to Section 4.11.2.

3.15 SOIL TESTING

The Contractor shall furnish to the Agency sieve analyses (per ASTM C 136), plasticity indexes (PI - per ASTM D 4318) and baseline maximum density tests (Modified Proctor per ASTM D 1557) of all bedding, cover and backfill material, whether native or imported. Submittals shall be in accordance with Agency requirements. Agency approval of the sieve analysis, Plasticity Index (PI), and maximum density tests shall be required prior to using these materials. All costs for having the sieve analyses, plasticity indexes, and baseline maximum density tests taken by a soils lab shall be paid for by the Contractor. In all cases, all soil samples shall be taken in the presence of the Agency's Representative.

The Contractor/Developer shall provide in-situ compaction testing of bedding, cover and backfill materials by a certified laboratory in accordance with ASTM D-1557. The Contractor/Developer shall take compaction tests using a Nuclear Density/Moisture Gauge in accordance with ASTM D-2922. Compaction testing locations shall be as directed by the Agency Representative. Compaction tests shall be taken at depths and locations shown in Table “I” or as directed by the Agency’s Representative. In-place soils shall be tested in accordance with ASTM D-1556, with the exception that no samples shall contain particles larger than 3/4 inch. The testing laboratory shall provide certified testing results for all tests performed. Contractor shall furnish updated Proctor, sieve and PI to the Agency for any changes in bedding, cover or backfill material prior to in-situ density testing by the Agency and whenever the Agency believes that the previously tested/approved materials have changed sufficiently in properties to impact material compaction.

Where compaction tests indicate a failure to meet the required compaction, additional tests shall be taken at the cost of the Contractor every 50 feet in each direction until the failing area is defined. The entire area between the passing test locations shall be reworked until the proper compaction requirements are achieved.

If the Contractor questions the results of in-situ density testing, Contractor shall engage a second testing laboratory at its cost to re-take tests following the same requirements as the initial tests. The locations of the second tests shall be as directed by the Agency Representative.

3.16 MANHOLE AND CAST-IN-PLACE STRUCTURE INSTALLATION

Construction shall consist of furnishing all materials and constructing manholes and cast-in-place concrete structures complete in place, as detailed in the Construction Documents and in Standard Drawings SD-1A through SD-13 as applicable, including foundation, base,

walls, cones/tops, grade rings, manhole frames, covers, and any incidentals thereto, at locations shown on the approved Construction Documents.

3.16.1 Manhole Base Construction:

All manholes on new public interceptor sewers, public collector sewers private collector sewers and new laterals shall have pre-cast manhole bases. New manholes on existing sewers or existing laterals may have cast-in-place bases or pre-cast bases at the Contractor's option. Pre-cast manholes shall conform to Section 4.9.1 and Standard Drawing SD-1. Cast-in-place bases shall conform to Standard Drawing SD-7. Contractor shall use an impression ring when forming cast-in-place manhole bases. This impression ring shall match the manhole components. Concrete for cast-in-place bases and flow channels within manholes shall conform to Section 4.11.2. At no time when placing concrete for cast-in-place manhole bases or other sanitary sewer structures shall the concrete be permitted to fall from a height greater than 6 feet (6') without the use of chutes, tremies or an elephant trunk. All structural concrete pours shall be performed in accordance with A.C.I. recommendations. The Contractor shall furnish the Agency's Representative with a copy of the concrete delivery ticket, which indicates the type of concrete and bonafide time stamp of when the truck was loaded, prior to any pouring operations. All concrete shall be poured from the truck within 90 minutes from the time on the concrete delivery ticket. Changes in direction of flow, and size and grade of manhole flow channels shall be in accordance with Section 2.2.10.b. and Standard Drawing SD-9.

Where cast-in-place manhole bases are allowed, the invert channels in the manhole shall be formed in accordance with Standard Drawings SD-7. Straight-through flow channels in cast-in-place shall be created by using a full sewer pipe closely matching the internal diameter of the existing main sewer pipe upstream and downstream of the manhole as a form for the flow channel. After the manhole base has cured at least seven days, the pipe in the base of the manhole shall be carefully sawed out to form a smooth invert through the manhole. Where branch sewers will enter cast-in-place manhole bases, at least 14-days prior to the manhole construction, Contractor shall submit a shop drawing of the manhole base construction for Agency approval. Flow channels shall conform to Section 2.2.10.b, Section 2.2.17 and Standard Drawing SD-9. The pipe(s) through the manhole base shall be connected to the existing upstream and downstream sewer pipes outside the new manhole using correctly sized flexible, water-tight couplings conforming to Section 4.9.6 to match the existing sewer line in which the manhole is being installed.

Contractor shall provide the Agency's Representative all concrete mix tickets upon delivery to the site of the work.

3.16.2 Assembling Pre-Cast Concrete Manhole Components:

Pre-cast manhole sections and grade rings on manholes and cast-in-place structures shall be joined by one of the following:

a. Pre-Cast Manhole Sections:

The “tongue” of the lower pre-cast section shall be placed pointing upward. In areas where groundwater is not likely to present, place one row of preformed butyl rubber rope sealant conforming to Section 4.9.7 in the lower step of the joint. In areas of higher groundwater and where designated by the Agency, place a double row of sealant in each pre-cast section joint to and including the barrel-to-cone joint. Place one row each on the upper step and the lower step of each tongue-and-groove joint. Where a PVC corrosion liner is utilized, weld liner lap joints between manhole sections in accordance with Section 3.16.8. The Engineer shall contact the Agency as early as possible in the Project design process to identify any additional requirements for design and installation of PVC corrosion liners in areas of high groundwater.

b. Grade Ring Joints:

Initial Placement Prior Final Elevation Adjustment: As a temporary measure to prevent entry of debris into newly constructed sewer systems and prior to adjusting manholes and structures to final grade, placing paving or final landscaping around the manholes/structures and installing concrete collars, grade rings may be joined by placing a single row of butyl rubber rope sealant conforming to Section 4.9.7 between the manhole cone or top of structure and the first grade ring, between grade rings and between the top grade ring and the manhole frame.

c. Final Manhole/Structure Adjustment:

Set grade rings with non-shrink cement grout conforming to Section 4.9.8. Grout shall cover the full width of the grade ring(s). The ring(s) shall be set fully concentric with the inside diameter of the manhole cone section or opening in the structure top. Grade rings not concentric shall be removed and replaced at no cost to the Agency. After grade ring is placed and prior to the grout taking a “set”, any excess grout that extruded into the manhole or structure shall be removed flush with the interior of the grade ring and top of the cone section or structure opening.

3.16.3 <u>Cast-in-Place Concrete Structures:</u>

Construction shall consist of furnishing all materials and constructing cast-in-place concrete structures complete in place, including foundation, base, walls, top, grade adjustment rings, manhole frames, covers, and any incidentals thereto, at locations shown on the approved Construction Documents.

Concrete for cast-in-place structures shall generally conform to Section 4.11.2. At no time when placing concrete for cast-in-place sanitary sewer structures shall the concrete be permitted to fall from a height greater than 6 feet (6') without the use of chutes, tremies or an elephant trunk. All structural concrete pours shall be performed in accordance with A.C.I. recommendations. The Contractor shall furnish the Agency's Representative with a copy of the concrete delivery ticket, which indicates the type of concrete and bonafide time stamp of when the truck

was loaded, prior to any pouring operations. All concrete shall be poured from the truck within 90 minutes from the time on the concrete delivery ticket.

Before being positioned, all reinforcing steel shall be free from loose mill and rust scale, and from coatings that may destroy or reduce the bond. Where there is delay in depositing concrete, reinforcement steel shall be re-inspected and cleaned where necessary. Reinforcing steel shall be accurately positioned in accordance with the drawings and secured by using annealed iron wire ties or suitable clips at intersections and shall be supported by concrete dobies, metal or plastic supports, spacers, or metal hangers. When it is necessary to splice reinforcing steel at points other than shown on the drawings, the character and location of the splice shall be determined by the Agency's Representative. Unless otherwise shown on the drawings or specified, splices shall be lapped a minimum of 32 bar diameters. All bends in reinforcing steel shall be cold bends accurately bent to shapes and angles as shown in the approved Construction Documents.

All welding required for cast-in-place concrete structures and other Project components shall be by the shielded arc method and shall conform to the AWS D1.1 "Structural Welding Code." Qualification of welders shall be in accordance with the "Specifications for Standard Qualification Procedure" of the AWS. Welds on stainless steel shall be made with stainless steel electrodes. Welders must furnish proof of certification prior to start of any welding.

3.16.4 Pipe Connection Installation:

Pipe connections to new manholes, existing pre-cast manholes and cast-in-place concrete structures shall conform to Sections 4.9.5 or 4.9.6 as applicable. Flexible connectors for pipe connections to new manholes shall be factory installed. Flexible connectors for pipe connections to existing manholes or cast-in-place concrete structures shall be field installed. Connections to pre-cast manhole bases shall conform to Standard Drawings SD-1A and SD-1B. Connections to new cast-in-place manhole bases shall conform to Standard Drawing SD-7. Outside piping for drop manholes shall as shown on Standard Drawing SD-12.

Holes for connections to existing manholes and new or existing cast-in-place concrete structures shall be cored completely through the existing manhole/structure wall at the specific diameter required for the particular connection coupling/boot being utilized. The finished hole shall be circular and sufficiently smooth for proper sealing of the coupling/boot. If, in to sole opinion of the Agency Representative, the existing manhole/structure is damaged beyond reasonable repair by the coring operation, the existing manhole/structure shall be replaced by a new manhole/structure meeting all requirements of these Standards at no cost to the Agency. Break-in connections or oversized cored holes are not allowed.

For existing manholes where ASTM C-923 compliant connections to manholes or structures are utilized, the sewer pipe shall be fully inserted into the manhole/structure such that it contacts the flow channel system with no appreciable gaps. If gaps are present either between the pipe and bench system or around the pipe between the outside of the pipe wall and the cored hole, these gaps shall be filled and finished flush on the inside of the manhole with non-

metallic, non-shrink grout conforming to Section 4.9.11 prior to the application of field-applied corrosion protection.

For new pre-cast manhole bases, the gaps and annular space between the end sewer pipe section protruding into the manhole, the manhole wall, and the manhole bench shall be grouted with full strength non-metallic, non-shrink Type V grout conforming to Section 4.9.11. The grout shall fully encase the reinforcing bars shown in Standard Drawing SD-9 located over the tops of the incoming pipes and extend to the ends of the incoming pipes.

3.16.5 Frame and Cover Installation:

Manhole and structure frames and covers shall conform to Section 4.9.2 and as shown in Standard Drawings SD-2 and SD-3. All machined surfaces on the frame and cover shall be such that the cover will lie flat in any position in the frame and have a uniform bearing through its entire circumference. Any frame and cover which creates any noise when passed over by automobiles shall be replaced. Frames shall be set firmly in a bed of cement grout conforming to Section 4.9.8 and shall be set true to finish grade as shown on the Construction Documents and as called for in these Standards. The grout shall extend across the full width of the base of the frame such that there are no voids under the frame. After the frame is placed and prior to the grout taking a “set”, any excess grout that extruded into the manhole or structure shall be removed flush with the interior of the frame and top of the cone section. Bolts shall be installed in the cover where required by Agency.

3.16.6 Exterior Waterproofing:

Exteriors of manholes and cast-in-place concrete structures in areas of high groundwater and in other areas as directed by the Agency shall be coated with waterproofing in accordance with Section 4.9.10. The waterproofing material shall be roller-applied over the entire exterior surface of the completed manhole/structure, including base section, barrel sections and cone/top section in accordance with the waterproofing manufacturer’s recommendations prior to backfilling the manhole/ structure. The waterproofing material shall be allowed to dry sufficiently before backfilling to assure that the waterproofing is not damaged or displaced during backfilling.

3.16.7 Excavation and Backfilling:

Excavations shall be made only large enough in size to permit sheeting if necessary and leave room to set necessary components in a workmanlike manner. Backfilling shall be done in accordance with Section 3.13.5.

3.16.8 Corrosion Protection (as required by Agency):

Contractor shall contact the Agency for the specific corrosion protection measures required for manholes and cast-in-place structures.

a. Manhole Corrosion Protection – Factory-Installed PVC Lining Systems:

The PVC liner system conforming to Section 4.9.9.a. shall be installed in the concrete section fabrication plant as part of the initial casting of the manhole barrel sections, wet-well sections, cone sections and undersides of flat-top sections. PVC liner installation in pre-cast manhole base sections shall conform to Standard Drawings SD-1A and SD-1B. PVC liner installation in cast-in-place manhole bases shall conform to Standard Drawing SD-7. Liners installed by bonding to cured concrete sections are not acceptable. The liner system shall cover 100-percent of: the vertical walls of the manhole or wet-well; the interior of the cone section, if any; and, the interiors of the adjustment rings. The adjustment ring liner shall be one piece from the manhole frame to the cone section shall be field-installed as part of the final manhole grade adjustment process. The joints between the PVC liner system sections shall be thermally welded in accordance with manufacturer's recommendations. Worker(s) performing the thermal welding shall be trained by the liner manufacturer. Manufacturer shall provide a written certification to the Agency attesting that said training has been conducted. This certification shall be effective for one-year after its date of issuance after which time the worker(s) must receive follow-up training and re-certification Manufacturer shall provide a representative on site to witness the joint welding in at least the first manhole installed and shall provide a written certification that the welding was performed in accordance with manufacturer's requirements. The Engineer shall contact the Agency as early as possible in the Project design process to identify any additional requirements for design and installation of PVC corrosion liners in areas of high groundwater.

b. Manhole and Cast-in-Place Structure Corrosion Protection – Field-Applied Coating Systems:

Field-applied coatings shall conform to Section 4.9.9.b. Coatings shall be applied only after the manhole/structure has been completed including back-filling and initial adjustment to grade. Coatings shall cover the manhole/ structure base including the flow channel, walls, cone/top and grade rings. Following final adjustment of the manhole/structure frame to finish grade, any grade adjustment rings added to the manhole/structure shall also be coated. This additional coating shall be blended into the initial manhole/structure coating in accordance with manufacturer's recommendations.

Coatings shall be applied in accordance with manufacturer's recommendations on new manhole or other structures that have been thoroughly cleaned immediately prior to coating installations. New concrete shall not be considered sufficiently "clean" in its installed condition without performing the manufacturer-recommended cleaning. Coatings shall be applied at 125-percent of manufacturer's minimum thickness recommendations on existing manholes and other structures that have been thoroughly cleaned immediately prior to coating installations. Coatings on new and existing manholes and other structures shall be applied within 48-hours of cleaning, but not until the cleaned surfaces have been inspected and approved for coating by the Agency Representative. Coatings applied without said approval shall be removed to the base structure for Agency inspection prior to re-coating. The

Agency Representative's inspection of the cleaning of manholes and other structures shall in no way relieve the Contractor of its responsibility to install the coatings in accordance with the manufacturer's recommendations and in no way relieve the Contractor of its ultimate responsibility for the quality and performance of the coating.

Worker(s) performing the cleaning and coating shall be trained by the coating manufacturer. Manufacturer shall provide a written certification to the Agency attesting that said training has been conducted. This certification shall be effective for one-year after its date of issuance after which time the worker(s) must receive follow-up training and re-certification. The coating manufacturer shall provide a representative on site to witness the cleaning and coating of at least the first manhole and structure installed and shall provide a written certification that the cleaning and coating was performed in accordance with manufacturer's requirements.

3.16.9 Debris Trap:

Following completion of the first manhole(s) upstream of the new connection(s) to the Agency's existing sanitary sewer system, a debris trap as shown in SD-30 shall be installed in said manhole. If the Contractor plans to place particular portions of the new sanitary sewers in operation before the entire system is completed, then each portion to be brought into service early shall also be protected from debris entry from upstream systems by similar such debris traps. The debris trap shall remain in place until all sanitary sewer improvements in the Project have been constructed, infiltration-tested, cleaned, mandrel-tested, televised and initially accepted by the Agency. Contractor shall inspect the debris trap no less often than monthly during construction and immediately following any sewer cleaning operations and shall immediately remove any debris that has accumulated. The Contractor is cautioned that hydrogen sulfide, methane, and other potentially hazardous and/or explosive gasses or other materials may be present in existing or new sanitary sewers. There also may not be sufficient oxygen in the sanitary sewer system to support life. Therefore the Contractor is advised to take suitable precautions to protect its work forces and the general public from exposure and shall provide odor control and other systems suitable for such conditions. After the new sanitary sewers are accepted by the Agency, the Contractor shall remove the trap in the presence of the Agency's Representative.

3.16.10 Odor Control Equipment:

Contractor shall install the odor control equipment shown in the approved construction Documents in those manholes and structures so designated. The installation shall be in accordance with manufacturer's recommendations. The odor control equipment shall be installed not less than 30 days nor more than 90 days prior to the time when the Contractor expects to begin sanitary wastewater through the new sewer system.

3.17 LATERAL SEWER CONNECTIONS

3.17.1 Lateral Connections to New Sewers:

Lateral connections into new public interceptor sewers, public collector sewers and private collector sewers shall be made in accordance with Section 2.2.19 and Standard Drawings SD-22 through SD-27 as applicable. Lateral connections will require the same bedding and backfill materials and installation procedures requirements as main line sewers. Deep lateral connections, if permitted, shall be constructed in accordance with the details shown in the approved Construction Documents.

The locations and configurations for lateral connections to new mains shall be in accordance with the approved Construction Documents. Field changes to the locations/configurations of laterals shown in the Construction Documents shall be approved by the Agency's Representative prior to installation. The Representative shall also inspect lateral installations prior to backfilling. Any laterals backfilled without Agency Representative observation shall be re-excavated for inspection at no cost to the Agency.

3.17.2 Lateral Connections to Existing Sewers:

The Contractor is cautioned that hydrogen sulfide, methane, and other potentially hazardous and/or explosive gasses or other materials may be present in existing or new sanitary sewers. There also may not be sufficient oxygen in the sanitary sewer system to support life. Therefore the Contractor is advised to take suitable precautions to protect its work forces and the general public from exposure and shall provide odor control and other systems suitable for such conditions.

Lateral connections made directly to existing public interceptor sewers, public collector sewers and private collector sewers shall conform to Standard Drawings SD-22 or SD-23 as applicable. To maintain the structural integrity of the existing mainline pipe, lateral connection taps shall be constructed in accordance with and using materials in accordance with existing sewer main pipe material manufacturer's recommendations. In the event that pipe manufacturer can't be determined, the Contractor shall follow the applicable pipe material trade association recommendations. The Contractor shall advise the Agency immediately and prior to performing any existing sewer taps, if it discovers any conflicts between that the sewer pipe manufacturer's (or trade association's) recommendations and these Standards. The Contractor shall propose modifications to these Standards as necessary to resolve the conflict for Agency review and Approval.

Laterals may be connected to existing sanitary sewers by two methods at the Contractor's option, unless otherwise directed by the Agency. Method 1: A section of the existing sewer shall be removed and replaced with a new wye fitting matching the pipe materials of the existing sewer and conforming to Section 4.7; or, Method 2: A hole shall be cored into the existing sewer and an appropriately sized tapping saddle conforming to Section 4.7.5 shall be installed in accordance with the saddle manufacturer's recommendations.

Wye fittings shall be connected to the existing sewer using appropriately sized synthetic or natural rubber couplings conforming to Section 4.9.6. Tapping saddles shall conform to Section 4.7.5. Both the wye-fitting and tapping-saddle type connections shall be supported by controlled low strength materials (CLSM) having a seven-day strength of not less than 100 psi and not more than 300 psi and conforming to Section 4.11.1. The CLSM shall be a minimum of 6-inches in thickness and shall fully encase the main longitudinally at least three diameters upstream and downstream from the new service connection along the main sewer and along the lateral. CLSM material for supporting new lateral connections to existing mains may be mixed on-site, provided that all aggregates used are washed and free of fines; and, Type V cement is used.

The locations and configurations for lateral connections to existing sewers shall be in accordance with the approved Construction Documents. Field changes to the approved lateral connection locations/configurations shall be approved by the Agency's Representative prior to installation. The Representative shall also inspect lateral connection installations after the pipe is installed but prior to CLSM placement and backfilling. Any connections backfilled without Agency Representative observation shall be re-excavated for inspection at no cost to the Agency.

3.17.3 Damage to Existing Sewers During Lateral Connection Installation:

Should the lateral connection process fracture or otherwise irreparably damage the existing sanitary sewer in to sole opinion of the Agency, the Contractor shall remove the damaged section of main by sawing it out and replacing it with a 45-degree wye service connection section of the same pipe material, size and structural rating at no cost to the Agency. The replacement wye shall be connected to the existing main using natural or synthetic rubber couplings conforming to Section 4.9.6 and shall be supported with CLSM as described in Section 3.17.2.

If, during the process to expose the existing main but prior to lateral connection installation, the Contractor finds that existing main is damaged, deteriorated or otherwise unsuitable for service connection installation, the Contractor shall advise the Agency Representative immediately. The Contractor shall develop a plan for correcting the damage/deterioration/unsuitability for review and approval by the Agency and the cost of such correction shall be borne by the Agency. If the Contractor fails to notify the Agency Representative of such damage, deterioration, or other unsuitability and proceeds with the service connection installation prior to Agency inspection of the subject damage/deterioration/unsuitability, it shall be presumed that the damage/deterioration/unsuitability was caused by the Contractor, who then shall correct the damage/deterioration/unsuitability at no cost to the Agency.

3.17.4 Tapping VCP, NRCP or ACP Mains:

When tapping an existing VCP, non-reinforced concrete pipe (NRCP) or ACP sewer pipes, only one lateral tap per section of pipe will be allowed. For VCP pipe, the tap shall be placed equidistant from the pipe section ends. For NRCP and ACP pipe, the tap shall be placed at least 4-feet away from any pipe end joint or

other pipe connection. To the maximum extent practical, the Contractor shall endeavor to minimize disturbance to the bedding below the spring line of the pipe when tapping VCP, NRCP and ACP mains. The Contractor shall save the coupon or core from coring of the sewer main for presentation to the Agency's Representative. Flexible natural or synthetic rubber tapping saddles conforming to Section 4.7.5 shall be used for all taps of VCP, NRCP or ACP. Saddles shall be installed in accordance with manufacturer's recommendations. Any bedding material disturbed or removed from beneath the pipe for installation of saddles shall be fully replaced and compacted to prevent future failure of the pipe. Completed installations of taps may not be backfilled until viewed by the Agency Representative.

3.17.5 Tapping RCP, CIP or DIP:

Taps shall be a minimum of 3 feet apart and a minimum of 18 inches from the bell/spigot. The Contractor shall save the coupon or core from coring of the sewer main for presentation to the Agency's Representative. Flexible natural or synthetic rubber tapping saddles conforming to Section 4.7.5 shall be used for all taps of RCP, CIP or DIP. For RCP pipe where pipe wall thickness permits, flexible pipe connections conforming to Section 4.9.5 may be utilized at the Contractor's option. Saddles and pipe connections shall be installed in accordance with manufacturer's recommendations. Any bedding material disturbed or removed from beneath the pipe for installation of saddles and pipe connections shall be fully replaced and compacted to prevent future failure of the pipe. Completed installation of taps may not be backfilled until viewed by the Agency Representative.

3.17.6 Tapping PVC and HDPE:

Taps shall be a minimum of 6 feet apart and a minimum of 24 inches from the bell/spigot. The Contractor shall save the coupon or core from coring of the sewer main for presentation to the Agency's Representative. Connections to PVC pipe shall be made using solvent-welded tapping saddles fully compatible with the pipe material of the existing sewer. Connections to HDPE shall be made using thermal-welded tapping saddles fully compatible with the pipe material of the existing sewer. Saddles shall be installed in accordance with manufacturer's recommendations. Any bedding material disturbed or removed from beneath the pipe for installation of saddles shall be fully replaced and compacted to prevent future failure of the pipe. Completed installation of taps may not be backfilled until viewed by the Agency Representative.

3.18 ABANDONMENT OF EXISTING FACILITIES

3.18.1 Main Lines and Laterals:

The Contractor is cautioned that hydrogen sulfide, methane, and other potentially hazardous and/or explosive gasses may be present in existing or new sanitary sewers. There also may not be sufficient oxygen to support life. Therefore the Contractor is advised to take suitable precautions to protect its work forces and the general public from exposure and shall provide odor control and other systems suitable for such conditions.

The Contractor shall televise the existing mainline sewer to be abandoned prior to beginning abandonment procedures to locate all existing pipe connections. Televising procedures and products shall be in accordance with the requirements in Section 3.19.1.e. Connection locations shall be delineated by the horizontal distance along the pipe centerline from the closest manhole. Contractor shall provide the televising record together with a written log of connection locations prior to beginning the abandonment process. Abandonment of main lines and laterals shall be by one of the following three methods, as approved by the Agency:

a. Crush line in place;
b. Excavate and remove line; or
c. Pressure grout line with approved grout

Method b. above may only be used for abandonment of ACP pipe with specific Agency approval. Contractor shall be responsible for disposal of removed asbestos-bearing pipe materials and soil in accordance with all applicable environmental regulations. Contractor shall identify disposal site and submit copies of required transportation and disposal permits to Agency prior to commencement of ACP pipe removal operations.

Where laterals are removed utilizing Method b., a properly sized cap shall be installed at the end of the wye where the lateral was removed and shall be sealed in place in accordance with manufacturer's recommendations. A concrete thrust block at least one-cubic-foot in size shall be poured at the wye cap to prevent the cap from being displaced during sewer cleaning and other maintenance operations. After the laterals are removed and the wyes capped the main sewer shall be televised. The television camera shall be stopped and pointed up each wye where a lateral was removed to show that the required cap is in place. Other televising procedures and products shall be in accordance with the requirements in Section 3.19.1.e.

Where Method c. is utilized to abandon laterals, the lateral connection to the mainline sewer shall be excavated and a properly sized cap shall be installed at the end of the wye where the lateral was removed and shall be sealed in place in accordance with manufacturer's recommendations. A concrete thrust block at least one-cubic-foot in size shall be poured at the wye cap to prevent the cap from being displaced during sewer cleaning and other maintenance operations. The contractor shall also excavate the upstream end of the lateral and grout the lateral from the downstream end to the upstream end until grout material flows out of the lateral at its upstream end. As an alternative the Contractor shall place a continuous 1-inch hose inside the lateral extending from the excavation at the main sewer to the upstream end of the lateral. The lateral shall then be grouted from the downstream end at the main sewer until grout material flows from the end of the 1-inch hose, demonstrating that the lateral has been completely filled. Where pressure grouting is utilized, the main sewers that receive flows from the sewer that was grouted shall be televised to verify that the main sewer was not obstructed by grout. Televising procedures and products shall be in accordance with the requirements in Section 3.19.1.e. Insides of manholes in main sewers remaining in service after the connecting pipes being abandoned have been fully grouted shall be trowelled smooth to eliminate pockets in the areas of the abandoned pipes that

could trap debris or sewer solids. Any grout in the main sewers and/or manholes remaining in service shall be removed by the Contractor at no cost to the Agency.

3.18.2 Manholes:

The Contractor is cautioned that hydrogen sulfide, methane, and other potentially hazardous and/or explosive gasses or other materials may be present in existing or new sanitary sewers. There also may not be sufficient oxygen to support life. Therefore the Contractor is advised to take suitable precautions to protect its work forces and the general public from exposure and shall provide odor control and other systems suitable for such conditions.

Manholes may be abandoned by one of the following methods as approved by the Agency. The Agency reserves the right to retain the salvaged manhole frames and covers that are found to be in reusable condition. The Contractor shall deliver the salvaged frames and covers to the location designated by the Agency Representative. Contractor shall dispose of those frames and covers not wanted by the Agency.

a. Where the existing sewer is also to be abandoned: Remove the manhole frame/cover, grade adjustment, cone and wall section to the base or a to depth of 15-feet below the ground surface whichever is less; crack the manhole base to permit drainage; and, dispose of all removed materials in accordance with local regulations. Backfill the hole created for removing the manhole in accordance with Section 3.13.5.

b. Where the existing sewer is also to be abandoned and where permitted by the Agency (case-by-case only): Remove the manhole frame/cover, grade adjustment, and cone to a depth of at least 2-feet below the ground surface; crack the manhole base to allow drainage; backfill the manhole components with select material; cap the top 2 feet of all components with concrete and, dispose of all removed materials in accordance with local regulations.

c. Where the existing main sewer is to remain in service: Remove the manhole in accordance with Methods 3.18.2.a. or 3.18.2.b. above except that the manhole base shall also be removed. Place a new section of sewer pipe matching the existing sewer in material, size, and structural capacity in the location of the removed manhole base and connected to the existing sewer main utilizing natural or synthetic rubber couplings conforming to Section 4.9.6. Sewer bedding and cover shall be placed and compacted around the new sewer pipe in accordance with Section 3.13.3 and the sewer pipe backfilled in accordance with Sections 3.13.4 and 3.13.5.

   Where permitted by the Agency, the main sewer may also be restored to service per Standard Drawing SD-8. This method is optional for the manhole removal method in Section 3.18.2.a above and is required for the removal method in Section 3.18.2.b above. Care shall be taken in affixing the half-pipe section to the existing manhole base to prevent infiltration into the main sewer and to permit unobstructed passage of sewer maintenance equipment.

3.19 TESTING

The new facilities will be accepted by the Agency in a two-step process. The initial step, hereinafter called "Initial Sanitary System Construction Acceptance (Initial Acceptance)" occurs after the new mainline sanitary sewers, manholes, force mains, pump stations, lateral connections to the property line and other sanitary system appurtenances depicted in the approved Construction Documents are installed and tested, but prior to the introduction of sanitary wastewater flows into the completed facilities. The final acceptance step hereinafter called "Final Acceptance" occurs in conjunction with release of the Bond for the overall development that the new sanitary sewers and appurtenances serve.

The sanitary sewer system testing that must be completed prior to Initial Acceptance consists of: sewer low-pressure air testing, force main pressure testing, pumping system run testing, manhole visual inspection, manhole corrosion protection testing, sanitary sewer cleaning, PVC sewer deflection testing, sanitary sewer televising, and any re-testing required following correction of the system defects discovered in the initial testing. The Agency shall establish the particular sequence of testing required for the new facilities. The new facilities must pass all of the above testing prior to the introduction of sanitary wastewater to the completed portions of the system.

The sanitary sewer testing that must be completed prior to Final Acceptance consist of: visual inspection of all facilities under flow conditions and additional sewer cleaning, if required, due to the accumulation of debris in the sanitary sewer system as a result of the construction of the individual sewer services and the introduction of wastewater to the sanitary system. When requested by the Agency, new public interceptor sewers, public collector sewers and private collector sewers shall be re-televised in accordance with Section 3.19.1.e.

3.19.1 Initial Sanitary System Construction Acceptance (Initial Acceptance) of Gravity Sewers and Appurtenances:

Following are the tests of the gravity sewers required in the Initial Acceptance process:

a. Low-Pressure Air Testing

All public interceptor sewers, public collector sewers, private collector sewers and portions of laterals installed by the Contractor as part of the Project shall be low-pressure air-tested for leakage after the initial backfill has been placed. Contractor shall give the Agency a minimum of two work days notice prior to performing any sanitary system air testing. No testing shall be performed until all sewer pipes have a minimum of 3-feet of cover or are encased or otherwise protected per Agency requirements. Systems failing testing shall be inspected by the Contractor and all defects causing the failure located and corrected. The system shall be re-tested, re-inspected as necessary and defects corrected until the system passes the air testing process. Written logs of each round of air testing, inspection and defect correction shall be prepared by the Contractor and submitted to the Agency.

Low Pressure Air Testing Procedure: for Gravity Sewer: Testing shall be shall conform to ASTM F 1417 and C 828. Tests may be conducted by the

Contractor or an independent testing firm. However, acceptance tests shall be made only in the presence of the Agency's Representative.

1. The Contractor shall seal off the section of pipe to be tested at each manhole connection. Test plugs shall be securely braced within the manholes.

2. Connect the air hose to the inlet cap and portable air control source. The air equipment shall consist of necessary valves and pressure gages to control an oil-free air source and the rate at which air flows into the test section to enable monitoring of the air pressure within the test section.
3. **UNDER NO CIRCUMSTANCES SHOULD WORKERS BE ALLOWED TO BE PRESENT IN THE CONNECTING MANHOLES OR NEAR TO THE SEWERS BEING TESTED WHILE A PRESSURE TEST IS BEING CONDUCTED.**

4. Add air slowly into the test section. After an internal pressure of 4.0 psi is obtained, allow internal air temperature to stabilize.

5. After stabilization period, adjust the internal air pressure to 3.5 psi, disconnect the air supply and begin timing the test.

6. Refer to Table "J" for plastic gravity sewer (ASTM F 1417) and for vitrified clay or other pipe materials (ASTM C 828) to determine the length of time (minutes) the section under test must sustain while not losing in excess of 1 psi as monitored by the test gauge. If the section of line to be tested includes more than one pipe size, calculate the test time for each size and add the test times to arrive at the total test time for the section.

7. Sections so determined to have lost not more than 1 psi during the test period shall have passed the leakage test. Those sections losing in excess of 1 psi during the test period shall have failed the leakage test.

8. The pipe shall be reinspected and, if necessary, replaced and relayed until the joints and pipe shall hold satisfactory under the test. Use of internal or external wraps, bands, sealants, caulks or grouts to correct defective joints is strictly prohibited.

b. Manhole Visual Inspection and Corrosion Protection Holiday Testing:

All public and private manholes will be visually inspected by the Agency prior to placement of corrosion protection coatings, if any. Visible defects shall be corrected and the manholes re-inspected by the Agency. Following the installation of protective coatings, manholes shall be visually re-inspected by the Agency. Any defects found in the coatings shall be corrected by the Contractor and the coatings visually re-inspected by the Agency. Following passage of visual inspection, corrosion protection liner PVC systems and field-applied corrosion protection coatings shall be holiday tested by the Contractor in accordance with Section 3.19.3. PVC manhole liners and coatings failing testing shall be inspected by the Contractor and all defects causing the failure located and corrected. The liners/coatings shall be re-tested, re-inspected if

necessary, and defects corrected until they pass the holiday testing process. Written logs of each round of holiday testing, inspection and defect correction shall be prepared by the Contractor and submitted to the Agency.

c. Sewer Cleaning:

Following passage of low-pressure air testing, manhole visual inspection and manhole corrosion protection testing and sewer trench backfilling, all public interceptor sewers, public collector sewers and private collector sewers shall be thoroughly cleaned. Contractor shall give the Agency a minimum of two work days notice prior to performing any cleaning operations. Debris shall be removed from the sewer and **NOT** be permitted to pass into existing sewers downstream.

d. Deflection Testing:

All public interceptor sewers, public collector sewers and private collector sewers shall be tested for deflection by passing a mandrel through said sewers. Contractor shall give the Agency a minimum of two work days notice prior to performing any deflection testing operations. Contractor shall perform deflection tests in the presence of the Agency's Representative. Deflection testing shall be conducted not less than 30 days after the sewer trench has been backfilled to the desired finish grade including the roadway granular base courses, compacted to the required densities, and all backfill compaction density testing performed and passed, but prior to placement of any hard-surface paving. The test shall consist of hand-pulling a mandrel which is not smaller in diameter than 95-percent of the required inside diameter of the sewer being tested per ASTM D3034 and ASTM F-679 as applicable. The mandrel shall be rigid and shall have an odd number of legs (nine legs minimum). The mandrel shall be tested for its dimensional integrity in the presence of the Agency Representative or authorized agent's, at a testing facility satisfactory to and approved by the Agency Representative prior to its testing. The mandrel shall be pulled through the pipe by hand only with a force not greater than the weight of the mandrel. If the mandrel is unable to pass through the pipe, the portion of the pipe that would not pass the mandrel shall be removed, reinstalled, re-air-tested, re-cleaned and re-mandrel-tested at no cost to the Agency. The re-installation and re-testing shall conform to all requirements of these Standards and the approved Construction Documents. Any pipe found to have suffered a permanent deflection of greater that 5-percent shall not be reinstalled. Use of re-rounding machines or other devices that create vibrations or other stresses inside the pipe to return the pipe to its required inside diameter shall not be permitted. Written logs of each round of mandrel testing, inspection and defect correction shall be prepared by the Contractor and submitted to the Agency.

After Initial Acceptance of the sanitary sewer system but prior to termination of the system warranty period, the Agency may test long term deflection of the new mainline sanitary sewers installed by the Contractor as part of this Project. The Agency will utilize generally the same testing procedure described in the preceding paragraph, except that the mandrel shall be sized to 92.5-percent of the nominal diameter of the subject sewer. If the mandrel is unable to pass

through the pipe, the portion of the pipe that would not pass the mandrel shall be removed, reinstalled, re-air-tested and re-mandrel-tested at no cost to the Agency. The re-installation and re-testing shall conform to all requirements of these Standards and the approved drawings. Any pipe found to have suffered a permanent deflection of greater that 5-percent shall not be reinstalled. Use of re-rounding machines or other devices that create vibrations or other stresses inside the pipe to return the pipe to its required inside diameter shall not be permitted.

e. Sewer Televising:

All public interceptor sewers, public collector sewers and sanitary sewers shall be televised. Contractor shall give the Agency a minimum of two work days notice prior to performing any sewer televising operations. Defects identified through televising shall be corrected and the system re-televised. Re-televising shall be from manhole to manhole in the sections of sewer where defects were found and corrected. Contractor shall submit a video record (DVD) of all televising performed. Contractor shall contact the Agency prior to initiating televising to determine the formatting and other requirements for the video record. Sewer televising with a color television camera having a horizontal resolution of not less than 480 lines. The camera shall have a self-contained lighting system capable of illuminating the interior of the sewer to daylight levels. The camera shall have a pivoting camera head. The maximum pull speed of the camera through the sewer shall be 25 feet per minute. The camera shall be stopped at every pipe connection and the camera head pivoted to scan the interior of the connection. The camera shall remain still for not less than one-minute while aimed up the pipe connection. The camera position in feet from the starting manhole shall be continuously recorded on the video image. The camera shall be operated in the same direction as the ascending stationing used in the Construction Documents, unless otherwise approved by the Agency.

The televising shall be completed in accordance with the National Association of Sewer Service Companies' (NASSCO's) specifications. A recording shall be made of the televising for delivery to the Agency. The Contractor shall contact the Agency for the specific formatting and other requirements for this recording. The televising shall not be performed until after the sewer lines have been completely backfilled including backfill compaction testing performed and passed testing, deflection testing performed and defects corrected, but prior to paving. Video results of the initial televising, written logs of system features, and written logs of defects located and corrected, and video results of the re-televising shall be prepared by the Contractor and submitted to the Agency. The Agency requires 2 working days per 1000 feet of sewer televised or minimum of 5 work days, whichever is longer, for review of video records. Once the televising has been completed and reviewed, an acceptance slip of the televising will be issued by the Agency.

3.19.2 Initial Sanitary System Construction Acceptance (Initial Acceptance) of Force Mains:

Force mains shall be tested for pressure and leakage in accordance with AWWA C900/C905 for PVC pipe and manufacturer's recommendations for HDPE pipe. Contractor shall give the Agency a minimum of two work days notice prior to performing any pressure/leakage testing operations. Each force main of dual force main installations shall be tested independently. Written logs shall be prepared of the pressure/leakage testing operations, written logs of system features, and written logs of defects located and corrected shall be prepared by the Contractor and submitted to the Agency.

a. General:

The field pressure and leakage test should be conducted on each section of each force main as soon as possible after the following requirements have been met.

Backfilling: Backfill sufficient to prevent the lifting of the force main pipe shall be in place prior to filling with water and field testing. When there is less than 3 feet of cover, testing shall not commence until finished subgrade is attained.

Concrete curing time: Before testing, at least 36 hours shall elapse after the last concrete thrust or reaction block has been cast.

b. Test Pressure:

Unless otherwise specified, the test pressure shall be double the operating pressure at the lowest elevation of the system. The test pressure for force mains larger than 16 inches shall be the design pressure (operating pressure plus surge) times 1.5. If the operating pressure is not known, the test pressure shall be 150 psig. However, the test pressure shall not exceed the rated pressure of the force main as recommended by the pipe manufacturer.

UNDER NO CIRCUMSTANCES SHOULD WORKERS BE ALLOWED TO BE PRESENT IN THE CONNECTING MANHOLES, PUMP STATION WET-WELLS, AIR/VACUUM VAULTS OR NEAR TO THE FORCE MAIN WHILE THE FULL TEST PRESSURE IS INITIALLY BEING APPLIED AND FOR A MINIMUM OF 60 MINUTES THEREAFTER. FOLLOWING THE 60 MINUTE, OR LONGER, WAITING PERIOD AFTER THE TEST PRESSURE REACHES REQUIRED MAXIMUM VALUE, EXTREME CAUTION SHALL BE EXERCISED IN APPROACHING THE PUMP STATION, FORCE MAIN AND APPURTENANCES TO INSPECT THEM FOR LEAKAGE OR OTHER DEFECTS.

c. Procedure:

The following procedure is premised such that a combined pressure and leakage test will be performed. The total time for the combined pressure and leakage test for each section shall be a minimum of 4 hours, unless otherwise specified. If separate tests are made, the pressure test shall be made first.

The duration of the pressure test shall be a minimum of 1 hour. The duration of the leakage test shall be a minimum of 4 hours. The pressure for the leakage test may be 150 percent of the maximum working pressure that will occur on that portion of the line or the test pressure, whichever is less.

1. Filling: After the force main has been laid, it shall be filled with water for a minimum of 24 hours before being subjected to the hydrostatic pressure test. The 24-hour requirement may be waived in part, as determined by the Agency, when the line being tested is made of a non-water-absorbing material. Each section of the force main shall be filled slowly with water and all air expelled by means of taps at points of highest elevation.

2. Pressurization: The specified test pressure shall be applied by means of a pump connected to the force main in a manner satisfactory to the Agency. The test pressure shall be maintained for the specified time during which all exposed pipe, couplings, fittings and valves shall be examined carefully for leaks.

3. Cracked or Defective Elements: All cracked or defective elements shall be removed and replaced and the test repeated until all visible leakage has been stopped and the test requirements have been met.

d. Allowable Leakage:

No pipe installation will be accepted if the leakage for the section of line that is tested is more than the rate of leakage specified in Table "K". If the test leakage in any section is greater than permitted, the leakage shall be located, repaired and the test performed until the leakage is within the permitted allowance.

e. Repairs:

All repairs in the force main shall be made by using standard repair couplings. All repairs shall be inspected and approved by the Agency prior to backfilling.

f. Backfill Procedure After Test:

Backfill shall not contain stones that are more than 4 inches in their largest dimension, and the backfill mixture shall not be used for disposal of refuse. Trenches under pavements and sidewalks shall be backfilled and compacted. The balance of the backfill for other trenches and those trenches not in the right-of-way shall be backfilled and compacted. Additional backfill shall be supplied if needed, to completely backfill the trenches or to fill depressions caused by subsequent settlement.

3.19.3 <u>Initial Sanitary System Construction Acceptance (Initial Acceptance) of Pump Stations:</u>

a. Corrosion Protection Holiday Testing:

The Agency shall perform a holiday spark test and mil test on steel can pumping station protective coatings prior to backfilling. The Contractor shall

thoroughly clean all dirt, concrete and other substances from the surface and paint any scratches or bare metal before testing.

Thin film coatings from 1 to 20 mils shall be tested with a Tinker & Rastor Model M1/AC Detector or similar Agency-approved equipment. Coatings and linkers thicker than 20 mils shall be tested with a Tinker & Rastor Model AP/W Detector or similar Agency-approved equipment. All testing shall be performed in accordance with NACE (National Association of Corrosion Engineers) International recommended practices RP0188, RP0274 and RP0490 as applicable. Testing shall only be performed in the presence of the Agency Representative. The Contractor shall maintain a log of all testing perform, the results of that testing, the correction methods utilized to correct any areas failing testing, and the results of re-testing failed and corrected areas.

The Agency will conduct mil thickness tests on the painted surfaces. Any areas that fail shall be repainted to the required thickness and retested.

b. Start-Up:

Contractor shall provide written notice to the Agency at least two weeks prior to the date it intends to start up a pump station. An authorized factory representative of the pumping station manufacturer shall start-up the pumping station. The factory representative shall be present for a minimum of two consecutive work days to perform start-up and to familiarize Agency staff with station operation.

3.20 FINAL ACCEPTANCE

3.20.1 Final Acceptance Testing:

Before final acceptance of sanitary sewer systems, the following must be completed to sole satisfaction of the Agency and as a minimum. The Contractor shall notify the Agency at least two work days prior to performing and testing required as part of the Final Acceptance process. Additional items and/or information regarding the completion of the sanitary sewerage improvements in conformance with the approved Construction Documents may also be requested by the Agency and shall be submitted prior to final acceptance of the improvements:

a. Permanent paving installed and accepted by roadway controlling agencies.

b. Removal of excess paving materials, soils, debris, plywood, and other construction materials from sewers and then hydraulic jet clean sewer lines after paving installation. Removal of spoil materials and cleaning of sewers shall be performed only in the presence of an Agency Representative.

c. For cast-in-place manhole bases, tops of pipes passing through manhole invert cut out, if any. The cutout shall fully expose the interior of the pipe between the manhole walls in accordance with Standard Drawing SD-7.

d. Pipe connections in pre-cast manholes grouted with non-shrink grout in conformance with Section 3.16.4.

e. Area cleanup completed.

f. All backfill density failures reworked, retested and accepted by the Agency.

g. All retesting of sanitary sewers and appurtenances completed and accepted by the Agency.

h. All discrepancies from the approved Construction Documents corrected and accepted by the Agency.

i. The Agency has the right to require additional televising of sewers if defects appear to be present during the visual inspection of the sanitary system. The Contractor shall complete the televising in accordance with Section 3.19.1.e at no cost to the Agency and correct any defects discovered in accordance with the Construction Documents.

j. All debris removed from the inside of sewers and manholes.

k. All monies owed the Agency paid in full.

l. All deflection testing of PVC pipe completed and accepted by the Agency.

m. All manhole collars installed where required.

n. All locking devices installed.

o. Corrosion protection holiday testing completed and accepted by Agency.

p. An approved trap installed at the most downstream manhole(s) of the developer-installed sanitary sewer main(s) immediately prior to the discharge into the Agency's existing sanitary sewer system.

q. Record drawings submitted per Section 3.10.

r. Bill of sale transferring title of the improvements from builder delivered to Agency per applicable rules and regulations.

s. Certification by Developer delivered to Agency that all sanitary sewer improvements have been constructed in general accordance with the requirements of the approved Construction Documents, including these Standards.

3.21 OCCUPANCY PERMIT GUIDELINES

The Agency is participating in the Certificate of Occupancy System initiated by the Building Department. Requirements established by enacted ordinances, along with other requirements established by the Building Department, must be met before the Building Department will issue an Occupancy Permit for a structure. This section presents the steps

that must be taken to meet all Agency criteria in order to satisfy a portion of the Certificate of Occupancy requirements.

The first step in obtaining approval from the Agency is completion of an application for sanitary sewer service at the Agency's Customer Service Section. At this time, a System Development Approval Charge (connection fee) must be paid. This permit is routed to the Engineering and Inspection Sections at the Agency. From that point on, the Agency's Inspection staff will examine and test all construction within the public right-of-way or dedicated easements until it conforms to Agency specifications.

3.21.1 Major Requirements:

The following categories include areas defined by the Agency as major requirements, but are not necessarily limited hereto:

a. Lines Tested:

All public interceptor sewers, public collector sewers and private collector sewers must pass low-pressure air-testing in accordance with Section 3.19.1.a.

b. Density Failures:

If backfill procedures appear to be inadequate in to sole opinion of the Agency Representative, compaction tests shall be required. If any compaction test fails, the area must be reworked 50 feet on each side, retested and passed. The Contractor shall be responsible for all costs of testing and re-compaction of backfill incurred.

c. Cleaning Sewers:

All public interceptor sewers, public collector sewers and private collector sewers must be jet-cleaned prior to deflection testing and televising; and, must be cleaned again following street paving and/or the permanent patch replaced. This procedure includes all collection lines and outfall lines. Following all sewer cleaning, any debris traps installed at the downstream end of the new sewer system shall be cleaned and the debris trap elbow removed. See Standard Drawing SD-30 for approved trap. Cleaning shall be performed in the presence of the Agency’s Representative.

If the existing sanitary sewer main receiving flow from the new sanitary sewers is an average of 1/3 full, alternate methods of cleaning the line may be approved by the Agency.

d. Deflection Testing:

All PVC public interceptor sewers, public collector sewers and private collector sewers shall be tested for deflection in accordance with Section 3.19.1.d after placement and compaction of the backfill material and completion of backfill compaction testing, but prior to paving. Should mandrel testing indicate any faulty installation of the pipe, repairs or replacement shall be made at the Contractor's expense as directed by the Agency's Representative.

e. Televising Sewers:

The Agency also reserves the right to require the Contractor to re-televising of any public interceptor sewers, public collector sewers and/or private collector sewers after paving if sewer condition problems are suspected. The Contractor shall re-televise those sanitary sewers as directed by the Agency in accordance with Section 3.19.1.e at no additional cost to the Agency. Should line televising identify any faulty installation of the pipe, repairs or replacement shall be made at the Contractor's expense as directed by the Agency's Representative.

All testing procedures presented in this Section 3.21.1 shall be completed and all defects identified through those testing procedures shall be corrected prior to Occupancy Permits being released. Major requirements can be termed minor, providing they do not directly affect the structure that is to be released.

3.21.2 Minor Requirements:

The following categories include areas defined as minor requirements, but not necessarily limited hereto and must be corrected prior to final acceptance of a tract or individual structure.

Lots in areas with resolution of minor requirements pending may be released individually providing that lot is not directly affected with the non-compliance with minor requirements.

a. Manhole Grouting:

Manhole components must be grouted prior to acceptance.

b. Adjusting Manholes:

Manholes shall be adjusted to the designed finish grade of the surrounding roadway final paving or finished landscape surface. If lines are constructed within an existing asphalt concrete area, a permanent patch must be placed where the existing asphalt concrete was removed. Debris must be removed from the manhole benches and inverts in the presence of the Agency's Representative.

3.21.3 Completion Guarantee in Emergency Situations:

In the event of emergency situations only, the Developer or Contractor, with the Agency's approval, may post a certified check or cashier's check made payable to the Agency in the amount of the work to be completed. (Amount to be specified by the Agency based on time and material.) Upon acceptance of the check, the Agency will release the permit or permits in question. If the Contractor or Developer corrects the deficiencies in the work prior to three months, the Contractor or Developer must notify the Agency in writing that repairs are completed, upon which the Agency will, after petitioning its governing body, release the amount posted to the party posting the check. If the Agency is required to

correct the deficiencies in the work in accordance with Agency specifications, that amount, based on time and material, shall be retained by the Agency. If any monies are left after reimbursing the Agency, that amount shall be refunded to the party posting the check. If additional amounts are necessary to reimburse the Agency fully, the Developer and/or Contractor shall pay the same to the Agency within 30 days of notice of the amount owed.

THIS PAGE LEFT BLANK INTENTIONALLY

DESIGN AND CONSTRUCTION STANDARDS

SECTION 4

CONTROL OF MATERIALS

TABLE OF CONTENTS

CONTROL OF MATERIALS

SECTION 4

Section		Description	Page No.
4.1		Source of Materials and Quality	4-1
4.2		Approval of New Materials	4-1
4.3		Storage of Materials	4-1
4.4		Handling Materials	4-2
4.5		Unacceptable Materials	4-2
4.6		Gravity Sewer Pipe and Fittings for New Installations	4-2
	4.6.1	PVC Sewer Pipe and Fittings	4-3
	4.6.2	Ductile Iron Pipe (DIP) and Fittings	4-4
4.7		Gravity Sewer Pipe and Fittings for Modification of Existing Sewers	4-5
	4.7.1	Extra Strength Vitrified Clay Pipe (VCP)	4-6
	4.7.2	Reinforced Concrete Pipe (RCP)	4-6
	4.7.3	PVC Sewer Pipe and Fittings	4-6
	4.7.4	Ductile Iron Pipe (DIP) and Fittings	4-6
	4.7.5	Tapping Saddles for Lateral Connections to Existing Sanitary Sewers	4-6
4.8		Force Main Pipe and Fittings	4-6
	4.8.1	Polyvinyl Chloride Pipe and Fittings 2-inch Through 3-inch	4-6
	4.8.2	Polyvinyl Chloride Plastic Pipe (PVC) and Fittings 4-inch Through 12-inch Nominal Diameter	4-6
	4.8.3	Polyvinyl Chloride Plastic Pipe (PCV) and Fittings 14-inch Through 48-inch Nominal Diameter	4-7
	4.8.4	High Density Polyethylene Pipe (HDPE) and Fittings	4-7
	4.8.5	Ductile Iron Pipe (DIP) and Fittings	4-7
4.9		Manholes and Appurtenances	4-8
	4.9.1	Pre-Cast Manhole Sections	4-8
	4.9.2	Manhole Frames and Covers	4-8
	4.9.3	Manhole Steps	4-8
	4.9.4	Manhole Internal Tie-Down Lugs	4-8
	4.9.5	Pipe Connections for New and Existing Pre-Cast Manholes	4-8
	4.9.6	Connections for Pipes Forming the Flow Channel in Cast-in-Place Manhole Bases as Shown in Standard Drawing SD-7 and for Concrete Pipe Field Closures as Shown in Standard Drawing SD-33:	4-9
	4.9.7	Manhole Section Joint Sealant	4-9
	4.9.8	Grout for Final Adjustment of Manhole Grade Rings	4-9

4.9.9 Manhole Interior Corrosion Protection 4-9
a Factory-Installed Corrosion Protection 4-9
b Field-Installed Corrosion Protection 4-9
4.9.10 Exterior Waterproofing for Pre-Cast and Cast-in-Place Concrete Structures 4-10
4.9.11 Grout for Sealing Pipe Connections 4-10
4.9.12 Styrofoam for Sanitary Sewer / Lateral Protection 4-10
4.10 Odor Control Equipment 4-10
4.10.1 Odor Control Manhole Inserts 4-10
4.10.2 Gas Phase and Liquid Phase Odor Control Equipment 4-11
4.11 Cement / Concrete 4-10
4.11.1 Controlled Low Strength Material (CLSM) 4-10
4.11.2 Concrete 4-10
4.12 Pipe Locator Ribbon and Marker Balls 4-11
4.12.1 Locator Ribbon for All Buried Sanitary System Pipes 4-11
4.12.2 Metallic Locator Ribbon for Force Mains and Reuse Pipes 4-11
4.12.3 Marker Balls for Curvilinear Sewers, Stub-Outs and Laterals 4-11
4.12.4 Marker Balls for Force Mains and Reuse Pipes 4-11
4.13 Valves 4-12
4.13.1 Air-Vacuum and Air-Release Valves 4-12
4.13.2 Discharge and Suction Line Valves 4-12
4.13.3 Check Valves 4-12
4.14 Paintings and Coatings 4-12
4.15 Reinforcing Steel 4-12
4.16 Grout and Dry Packs 4-12

THIS PAGE LEFT BLANK INTENTIONALLY

SECTION 4

CONTROL OF MATERIALS

4.1 SOURCE OF MATERIALS AND QUALITY

All construction materials to be used on the work or incorporated into the work, equipment, plant, tools, appliances or methods to be used on the work shall be subject to the inspection and approval or rejection by the Agency Representative.

The materials used on the work shall be new and shall meet all quality requirements as defined by these Standards, all referenced standards, and other locally or nationally recognized standards.

4.2 APPROVAL OF NEW MATERIALS

All materials to be incorporated in the work may be subject to sampling, testing and approval, and samples furnished shall be representative of the materials to be used. The Contractor shall pay all costs incurred for any required tests. Samples and tests shall be made in accordance with the standard methods of ASTM, AWWA and/or other reference standards cited in effect on the date on which the Construction Documents were approved.

The laboratory responsible for the test shall furnish at least three copies of the test results to the Agency or its designated representative.

With respect to certain manufactured materials, the Agency may permit the use of some materials prior to sampling and testing provided they are delivered with either a certificate of compliance or analysis or both, stating that the materials comply in all respects with the requirements of the specifications. These certificates shall be furnished in triplicate and clearly identify each delivery of materials to the work area. The certificates shall be signed by a person having legal authority to bind the supplier or manufacturer.

4.3 STORAGE OF MATERIALS

The Contractor shall provide storage facilities and exercise such measures as shall ensure the preservation of the quality and fitness of all materials and/or equipment to be used in the work. Stored materials and/or equipment, even though approved before storage, may again be inspected prior to its use in the work. Stored items shall be located so as to facilitate their prompt inspection. The Agency shall be allowed to inspect all materials during normal business hours upon reasonable notice.

PVC and HDPE pipe and fittings shall be stored at the jobsite in a unit package provided by the manufacturer and shall be sheltered from sunlight. Long-term storage with exposure to sunlight shall not be permitted. PVC and HDPE pipe and fittings shall not be stored at the jobsite for more than sixty days prior to incorporation into the work and backfilling. PVC and HDPE pipe and fittings shall be marked with the date of their manufacture. Pipe and fittings having dates of manufacture more than one year old shall not be used.

If the manufactured date for PVC and HDPE pipe and/or fittings is greater than six months prior to installation into the Project, samples shall be taken from the oldest pipe and/or fittings and tested by the manufacturer in accordance with the ASTM testing requirements

for new pipe to verify that no degradation of the material has occurred, unless otherwise directed by the Agency. At least one test shall be conducted for each 100-feet of pipe and each ten fittings having ages is within 60-days of the oldest pipe and/or fitting. All test samples shall be taken from the oldest 10-percent of the pipe and/or fittings in question. The manufacturer shall provide a certification to the Agency that no detrimental degradation has occurred in the tested materials and that these materials still meet all applicable ASTM standards. If manufacturer testing shows that detrimental deterioration has occurred, all pipe and/or fittings manufactured within 60-days of the tested pipe shall be removed from the Project site. The next oldest pipe and/or fittings shall then be tested by the manufacturer following the same procedures. This testing and material removal process shall continue until the pipe and fittings are found to be free of degradation. Any PVC or HDPE pipe or fittings discolored or otherwise damaged by exposure to sunlight shall not be used and shall be removed from the site regardless of the date of manufacture or manufacturer test results.

PVC and HDPE pipe shall not be stored close to a source of heat, such as heaters, or engine exhaust. Gaskets shall be kept free of dirt, foreign matter and exposure to heat, sunlight, ozone, oil and grease.

Other materials used for manufacture of sanitary sewer system components or directly incorporated into the construction shall not exceed the manufacturer's recommendations regarding the maximum safe "shelf life" prior to use of such products. When requested by Agency, the Contractor shall provide certifications from material manufacturers and/or system component fabricators that that the manufacturer's recommended shelf life of incorporated products has not been exceeded.

4.4 HANDLING MATERIALS

All materials and/or equipment shall be handled in such a manner as to preserve their quality and fitness for the work.

Unloading shall be in units using appropriate equipment, such as forklift trucks, cherry pickers or front end loaders with forks. Pipe may also be unloaded by hand. If any units are unloaded using chains or cables, this shall be cause for rejection of pipe.

4.5 UNACCEPTABLE MATERIALS

All materials and/or equipment not conforming to the requirements of the specifications, whether in place or not, may be rejected. Rejected materials and/or equipment shall be removed from the Project area immediately. Damaged or bowed pipe shall be rejected. No rejected material and/or equipment, the defects of which have been subsequently corrected, shall be used unless approved thereto in writing by the Agency.

4.6 GRAVITY SEWER PIPE AND FITTINGS FOR NEW INSTALLATIONS

The following materials are acceptable for use in design and construction of new gravity sewer mains and laterals. The Engineer shall contact the Agency as early as possible in the Project design process for additional requirements for sewers greater than fifteen-inches in diameter. The Engineer may propose alternative materials and shall submit supporting documentation as required by the Agency to demonstrate the suitability of the alternative material for use on the Project. The Agency reserves the right to restrict or prohibit the use of any material where it deems necessary.

The manufacturer shall provide a certification that all pipe materials delivered to the Project conform to the following requirements or those requirements established by the Agency for alternative pipe and/or fitting materials. The Contractor shall advise the Agency of the date when and location where pipe and fittings will be manufactured for the Project. The Agency may witness the pipe and fitting manufacturing operation if it so chooses. Agency observation of pipe and fitting manufacture in no way relieves the manufacturer, Developer or Contractor from their responsibilities to conform to all requirements of these Standards and other standards referenced herein. If the pipe and/or fittings for the Project are being obtained from manufacturer's stock, the Contractor shall advise the Agency of the location where the manufacturer is storing these materials at least seven calendar days prior to the date when the materials will be shipped to the Project site. The Agency may inspect the materials and the material storage area if it so chooses. The Agency's inspection of the materials and/or storage area in no way shall relieve the manufacturer from its responsibility to store materials in a manner that does not cause degradation of those materials.

4.6.1 PVC Sewer Pipe and Fittings:

a. Solid wall polyvinyl chloride (PVC) sewer pipe and fittings 4-inches through 15-inches in diameter shall conform to ASTM D-3034, SDR 35 minimum.

b. Solid wall polyvinyl chloride (PVC) sewer pipe and fittings 18-inches through 48-inches in diameter shall conform to ASTM F-679, PS-46 minimum.

c. Open or closed profile pipe may be used for sewer diameters 36-inches and larger, upon approval by the Agency. Profile wall polyvinyl chloride (PVC) sewer pipe and fittings 36-inches through 48-inches in diameter shall conform to ASTM F-794, PS-46 minimum. Closed profile wall polyvinyl chloride (PVC) sewer pipe and fittings 36-inches through 48-inches in diameter shall conform to ASTM F- 1803, PS-46 minimum.

d. PVC pipe and fittings conforming to Sections 4.8.2 and 4.8.3

e. PVC pipe shall not contain more than 10 percent filler.

f. The Engineer is advised that pipe meeting the above requirements may not be suitable for all burial depths and backfill configurations. Therefore, the Engineer shall submit structural calculations in conformance with Section 2.2.15. with the initial submittal of the Construction Documents for Agency review demonstrating that the pipe wall strength is suitable for the pipe bury depth and backfill procedures anticipated for the Project. If more than one pipe structural capacity is required for the Project, each section of pipe shall be clearly marked to as to the locations where it is to be placed. This marking system shall be approved by the Agency.

g. All pipe and fittings shall be suitable for use as gravity sanitary sewer conduits. Provisions must be made for contraction and expansion at each joint with an elastomeric gasket. The pipe bell shall consist of an integral wall section with assembled solid-cross-section, factory-assembled elastomeric gasket, securely locked in place to prevent displacement, plus a decoder sheet for the pipe markings shall be provided by the Contractor.

h. Caps and plugs for stub-outs and laterals may be molded or fabricated from PVC, rubber, polyurethane or other suitable compound and shall be capable of withstanding the required sanitary system air-testing pressures and sewer maintenance operations when installed.

i. Pipe and fitting gaskets shall be manufactured from a synthetic elastomer and shall comply in all respects with the physical requirements specified in ASTM F-477 and shall be suitable for extended contact with the constituents of municipal sanitary wastewater.

j. The lubricant used for assembly shall have no detrimental effect on the gasket or on the pipe.

k. Joints for the piping system and fittings shall meet ASTM F-1336 and shall consist of an integral-bell gasketed joint designed so that when assembled, the elastomeric gasket located within the bell is compressed radially on the pipe or fitting spigot to form a positive seal. The joint shall be designed to prevent displacement of the gasket from the joint during assembly and when in service.

l. Joints shall provide a permanent seal against exfiltration and infiltration. All surfaces of the joint upon which the gasket may bear shall be smooth and free of any imperfections which could adversely affect sealability.

m. The assembly of the joints shall be in accordance with the pipe manufacturer's recommendations and these Standards.

n. Fittings for PVC pipe may include elbows, wyes, tee wyes, double bell couplings, manhole couplings, manhole adapter rings, plugs, caps, adapters, increasers, and tapping saddles.

o. Connections to new manholes shall meet ASTM C-923 and conform to the requirements of Section 2.2.10.h.

p. Certification of New Materials: PVC not previously certified for use by the Agency shall be submitted for approval with a certificate from the manufacturer certifying that the pipe and fittings meet the requirements of ASTM D-3034 (SDR-35), ASTM F-679, ASTM F-794, and ASTM F-1803, Pipe Stiffness = 46 psi at 5 percent deflection minimum.

q. Imperfections: Any imperfections, including discoloration warping ovality or surface pitting, which in the sole opinion of the Agency, may adversely affect the performance of the pipe or joints shall be cause for rejection.

4.6.2 <u>Ductile Iron Pipe (DIP) and Fittings:</u>

a. DIP may be used only upon specific Agency approval. As soon as is practical in the Project design process, the Engineer shall contact the Agency regarding the Project circumstances that require the use of DIP. The Engineer shall demonstrate that no other system configuration or pipe material can be utilized to eliminate the need for DIP. Cost of installation alone shall not be considered as reasonable justification for use of DIP.

b. DIP shall be centrifugally cast in molds in accordance with AWWA C151. Unless otherwise specified, ductile iron pipe shall be at least thickness Class-51 for pipe 4 inches in diameter and at least thickness Class-50 for pipe 6 inches in diameter and larger.

c. Fittings shall be in accordance with AWWA C110 or AWWA C153 and shall have a wall thickness of not less than that of the pipe with which they are used.

d. Ductile iron pipe and fittings shall be epoxy lined in accordance with AWWA C116 or shall be glass lined. The exteriors of ductile iron pipe and fittings shall be coated with a factory-applied bitumastic coating resistant to abrasion and water penetration.

e. Solid cross-section, elastomeric gaskets suitable for extended contact with the constituents of municipal sanitary wastewater shall be provided for all pipe and fitting joints.

f. Polyethylene encasement for ductile iron pipe and fittings shall be manufactured in accordance with AWWA C105. Two layers of encasement material shall be required for each pipe or fitting. Each layer of the encasement material shall have a minimum thickness of 8 mil.

4.7 GRAVITY SEWER PIPE AND FITTINGS FOR MODIFICATION OF EXISTING SEWERS

The following materials are acceptable for use in making modifications to existing gravity sewer mains and laterals, such as the installation of manholes, the removal of manholes or making lateral connections. The Engineer shall contact the Agency as early as possible in the Project design process for additional requirements for sewers greater than fifteen-inches in diameter. The Engineer may propose alternative materials and shall submit supporting documentation as required by the Agency to demonstration the suitability of the alternative material for use on the Project. The Agency reserves the right to restrict or prohibit the use of any material where it deems necessary.

The manufacturer shall provide a certification that all pipe materials delivered to the Project conform to the following requirements or those requirements established by the Agency for alternative pipe and/or fitting materials. The Contractor shall advise the Agency of the date when and location where pipe and fittings will be manufactured for the Project. The Agency may witness the pipe and fitting manufacturing operation if it so chooses. Agency observation of pipe and fitting manufacture in no way relieves the manufacturer, Developer or Contractor from their responsibilities to conform to all requirements of these Standards and other standards referenced herein. If the pipe and/or fittings for the Project are being obtained from manufacturer's stock, the Contractor shall advise the Agency of the location where the manufacturer is storing these materials at least seven calendar days prior to the date when the materials will be shipped to the Project site. The Agency may inspect the materials and the material storage area if it so chooses. The Agency's inspection of the materials and/or storage area in no way shall relieve the manufacturer from its responsibility to store materials in a manner that does not cause degradation of those materials.

4.7.1 Extra Strength Vitrified Clay Pipe (VCP):

Vitrified clay pipe and fittings shall conform to ASTM C700 and shall be furnished with elastomeric compression joints, compression couplings or Agency approved equal. Materials for compression joints or compression couplings shall conform to ASTM C425.

4.7.2 Reinforced Concrete Pipe (RCP):

The Engineer shall contact the Agency as early in the Project design process as practical to obtain the requirements for modifying and/or connecting to existing RCP sanitary sewers. New RCP used for the modifications/connections shall conform to the requirements of ASTM C76 and cement shall be Type V. Joints shall be made water-tight and root-tight in an approved manner, in accordance with ASTM C443. Unless otherwise directed by the Agency, all concrete pipe for sanitary sewers shall be lined using T-lock Amer-Plate manufactured by Ameron or approved equal. The Engineer shall calculate D-Loads for each reach of the pipe being installed. These calculations shall be based on the following equation:

$$\text{D-Load} = \frac{\text{Design Load x 1.5 Safety Factor}}{\text{Bedding Factor x Diameter}}$$

4.7.3 PVC Sewer Pipe and Fittings:

PVC sewer pipe and fittings shall conform to Section 4.6.1

4.7.4 Ductile Iron Pipe (DIP) and Fittings:

Ductile iron pipe and fittings shall conform to Section 4.6.2.

4.7.5 Tapping Saddles for Lateral Connections to Existing Sanitary Sewers:

Tapping saddles shall be Fowler Inserta-Tee or approved equal.

4.8 FORCE MAIN PIPE AND FITTINGS

Force mains and fittings shall be constructed the same material, which shall be one of the following materials as approved by the Agency:

4.8.1 Polyvinyl Chloride Pipe and Fittings 2-inch Through 3-inch:

Where permitted by the Agency, force main pipe and fittings shall be Schedule 80 PVC conforming to ASTM D1785. PVC Schedule 80 pipe shall be manufactured from a Type I, Grade I Polyvinyl Chloride (PVC) compound with a Cell Classification of 12454 per ASTM D1784.

4.8.2 Polyvinyl Chloride Plastic Pipe (PVC) and Fittings 4-inch Through 12-inch Nominal Diameter:

Force main pipe and fittings shall be Class PR 150 (DR18) or PR 200 (DR14) Thickwall PVC in accordance with AWWA C900 as required to withstand system

design operating pressures including surge, dead loads and live loads. Pipe compound shall meet cell class 12454 per ASTM D-1784. The pipe seal shall meet the requirements of ASTM F-477.

4.8.3 Polyvinyl Chloride Plastic Pipe (PVC) and Fittings 14-inch Through 48-inch Nominal Diameter:

Force main pipe and fittings shall be Class PR 165 (DR25) or PR 235 (DR18) Thickwall PVC in accordance with AWWA C905 as required to withstand system design operating pressures including surge, dead loads and live loads. Pipe compound shall meet cell class 12454 per ASTM D-1784. The pipe seal shall meet the requirements of ASTM F-477.

4.8.4 High Density Polyethylene Pipe (HDPE) and Fittings:

Where permitted by the Agency, force mains shall be DR17 or DR21 HDPE conforming to ASTM D-3035 as required to withstand system design operating pressures including surge, dead loads and live loads. Pipe resin materials shall meet ASTM D-3350 with a minimum cell classification of PE345464C. The pipe joints shall be full-fusion butt welds made without introduction of additional HDPE materials. Fittings shall be in accordance with ASTM D-3261.

4.8.5 Ductile Iron Pipe (DIP) and Fittings:

Ductile iron pipe may be used for force mains only with Agency approval and only when the unique circumstances of the Project preclude the use of other allowable force main materials. As soon as is practical in the Project design process, the Engineer shall contact the Agency regarding the Project circumstances that require the use of DIP. The Engineer shall demonstrate that no other system configuration or pipe material can be utilized to eliminate the need for DIP. Cost of installation alone shall not be considered as reasonable justification for use of DIP.

a. Ductile iron pipe and fittings shall conform to Section 4.6.2.

b. Fittings shall be in accordance with ANSI A21.10 or AWWA C153, Class 150.

c. Joints for ductile iron pipe shall be furnished with mechanical or push-on joints (AWWA C111, Class 150, or ANSI A21.10 and A21.11), mechanical type coupling flanged joints, or flexible couplings. Gaskets for mechanical and push-on joints shall be solid cross-section, elastomeric gaskets suitable for extended contact with the constituents of municipal sanitary wastewater. Gasket material for flanged joints shall be 1/8-inch thick, cloth inserted rubber, one piece, full faced with holes to pass bolts. Buried bolts and nuts shall be stainless steel Type 316.

d. Polyethylene encasement for ductile iron pipe and fittings shall be manufactured in accordance with AWWA C105. Two layers of encasement material shall be required for each pipe or fitting. Each layer of the encasement material shall have a minimum thickness of 8 mil.

4.9 MANHOLES AND APPURTENANCES

4.9.1 Pre-Cast Manhole Sections:

Pre-cast manhole components, including bases, barrel sections, cones and grade rings, shall conform to ASTM C478 and Standard Drawings SD-1 through SD-13 as applicable. Concrete for pre-cast manhole components shall conform to 4.11.2.

4.9.2 Manhole Frames and Covers:

Engineer shall contact the Agency for a list of manufacturers and casting model numbers of approved manhole frames and covers. Manhole frames and covers shall be gray iron Class 35B minimum. All mating surfaces on the frame outer cover and inner cover shall be machined across the full widths of their mating surfaces such that the covers will lie flat in any position in the frame/outer cover without rocking and have a uniform bearing through their entire circumferences. Manhole frames and covers shall be dual opening having a 36-inch clear outer opening (38-inch Cover OD) and a 22-inch clear inner opening (24-inch cover OD). Where required by the Agency, the 36-inch outer cover shall be bolted to the frame using a minimum of four 7/8-inch pent-head bolts and shall have one 1-inch diameter vent hole. For paved and landscaped areas, the inner cover shall be unbolted and shall have one 1-inch pickhole. For unimproved areas, the inner cover shall be bolted to the outer cover using a minimum of two 7/8-inch pent-head bolts and one 1-inch pickhole where required by the Agency. The “Standard Concentric Dual Cover and Frame” shown in Standard Drawing SD-2 shall be used for manholes without steps. The “Standard Eccentric Dual Cover and Frame” shown in Standard Drawing SD-3 shall be used for manholes with steps.

4.9.3 Manhole Steps:

Manhole steps shall be in accordance with ASTM-C-478 and conform to Standard Drawing SD-6. Steps shall be made from polypropylene meeting ASTM D-4101 and having an internal 1/2-inch Grade 60 steel reinforcing bar meeting ASTM A-615. Testing of manhole steps shall be in accordance with ASTM C-497.

4.9.4 Manhole Internal Tie-Down Lugs:

Tie-down lugs shall be placed inside the cone and base sections of pre-cast concrete manholes as shown on Standard Drawing SD-1A. The lugs shall be shaped as shown on Standard Drawing SD-1A and shall have a minimum cross-section of 1-inch diameter and shall be made of Type 316 stainless steel. The lugs shall be cast into the pre-cast cone and base sections in their initial pourings and shall have a resistance to pull-out of a minimum of 1000 pounds applied at 90-degrees to the casting wall. The Agency at its sole discretion may require physical testing of the pull-out resistance of the tie-down lugs.

4.9.5 Pipe Connections for New and Existing Pre-Cast Manholes:

Pipe connections to pre-cast manholes shall meet the requirements of ASTM C-923. Pipe connections to new manholes shall be factory-installed and shall be Z-Lok, Press-Seal PSX, or approved equal. Pipe connections to existing manholes shall be

installed only in accurately-sized, field-cored holes and shall be Kor-N-Seal, Press-Seal Press Boot or approved equal.

4.9.6 Connections for Pipes Forming the Flow Channel in Cast-in-Place Manhole Bases as Shown in Standard Drawing SD-7 and for Concrete Pipe Field Closures as Shown in Standard Drawing SD-33:

Couplings shall be natural or synthetic rubber conforming to ASTM C-1173 as manufactured by Fernco, Inc, Mission Rubber Company, or equal as approved by the Agency. Coupling attaching bands shall be 300 Series Marine Grade Stainless Steel conforming to ASTM A-240 or approved corrosion-resistant equal.

4.9.7 Manhole Section Joint Sealant:

Preformed 100-percent butyl rubber rope sealant having a minimum 1-inch by 1-inch cross-section such as Kent Seal or approved equal.

4.9.8 Grout for Final Adjustment of Manhole Grade Rings:

Grout for areas where high groundwater conditions are not expected shall consist of one part Type V cement, one part of washed sand, and one part non-metallic non-shrink Type V grout, such as Masterflow 713 Grout by Master Builders, Five Star Grout by U.S. Grout Corporation with additives for protection against hydrogen sulfide (H_2S) attack, or approved equal.

Grout for areas where high groundwater is expected and where directed by the Agency shall be full-strength Masterflow 713 Grout by Master Builders, Five Star Grout by U.S. Grout Corporation, or approved equal with additives for protection against hydrogen sulfide (H_2S) attack.

4.9.9 Manhole Interior Corrosion Protection:

a Factory-Installed Corrosion Protection

Factory-installed corrosion protection lining for pre-cast concrete manholes and other pre-cast sanitary sewer components shall be T-Lock Amer-Plate polyvinyl chloride liner by Ameron International or Agency-approved equal. The PVC liner shall have a T-ribbed back and shall be installed in the initial pour of the concrete section. Liners installed by bonding into cured concrete sections are not acceptable. The Engineer shall contact the Agency as early as possible in the Project design process to identify any additional requirements for design and installation of PVC corrosion liners in areas of high groundwater.

b Field-Installed Corrosion Protection

Field-installed corrosion protection lining for pre-cast concrete manholes and other pre-cast or cast-in-place concrete sanitary sewer components shall be Raven 405, Sauereisen SewerGard 210 or Agency-approved equal. If required and as specified by the Agency, an underlayment of Sauereisen F-120, F-121, or SewerGard 209 may be utilized for Sauereisen SewerGard 210.

4.9.10 Exterior Waterproofing for Pre-Cast and Cast-in-Place Concrete Structures:

TREMproof 60 (TP-60R) by Tremco or Agency-approved bitumen-modified, moisture-curing polyurethane coating that is applied by rolling.

4.9.11 Grout for Sealing Pipe Connections:

Masterflow 713 Grout by Master Builders, Five Star Grout by U.S. Grout Corporation, or Agency approved non-metallic, non-shrink Type V grout with additives for protection against hydrogen sulfide (H_2S) attack.

4.9.12 Styrofoam for Sanitary Sewer / Lateral Protection

Styrofoam shall be a minimum of 2-inches thick and shall be shaped to fit the outside of the sanitary sewer pipe or sanitary lateral pipe to be protected without gaps or protrusions. The Styrofoam shall fully cover the top of the pipe from springline to springline in one piece. The Styrofoam shall be Type I or Type II meeting GSA specification HH-I-524C.

4.10 ODOR CONTROL EQUIPMENT

4.10.1 Odor Control Manhole Inserts:

Odor control manhole inserts shall be a specified by the Agency. Engineer shall contact the Agency early in the Project design process for specific Agency requirements. Generally, where odor control manhole inserts are required, these inserts shall be Odor Knocker Model RX or Agency-approved equal. Odor control inserts shall be adequately sized and installed per manufacturer's recommendations. Odor control inserts shall be sized to fit in the inner opening of dual manhole covers shown in Standard Drawing SD-2 and SD-3 as applicable, except that the solid inner cover shall be replaced with an open-grade style inner cover having at least forty-percent open area as approved by the Agency.

4.10.2 Gas Phase and Liquid Phase Odor Control Equipment:

Gas phase and liquid phase odor control equipment shall be as specified by the Agency. Engineer shall contact the Agency early in the Project design process for specific Agency requirements. Generally, gas phase odor control equipment shall be Calgon or equal. Liquid phase odor control equipment shall be Bioxide or equal. Equipment sizing shall be as recommended by the manufacturer and as approved by the Agency.

4.11 CEMENT / CONCRETE

Cement for CLSM and structural concrete shall be Type V Portland Cement in accordance with ASTM C-150 (latest revision).

4.11.1 Controlled Low Strength Material (CLSM):

CLSM shall be as specified in Section 208.02.07 of the Standard Specifications, mixed with washed mortar sand.

4.11.2 Concrete:

Concrete materials and mixing shall conform to Section 501 of the Standard Specifications. Concrete shall be as follows:

Minimum Compressive 28 Day Strength	3000 psi
Slump (Maximum)	4 inches

No additives shall be permitted unless prior approval of the Agency is obtained. Testing shall be taken at the Agency's request.

4.12 PIPE LOCATOR RIBBON AND MARKER BALLS

4.12.1 Locator Ribbon for All Buried Sanitary System Pipes:

Pipe locator ribbon shall be a highly durable plastic material that shall have a minimum 50-year service life in buried applications, regardless of soil or groundwater conditions. Locator ribbon shall be green in color for the raw wastewater lines and purple in color for the effluent reuse lines and shall have the clearly printed legend, "Buried Sewer Line Below," printed continuously along its length with minimum 1-inch letters. The ribbon shall be not less than 2 inches wide.

4.12.2 Metallic Locator Ribbon for Force Mains and Reuse Pipes:

Locator ribbon for force mains, water reuse pipe and other pressurized wastewater transmission pipes shall conform to Section 4.12.1 and additionally shall have an embedded metallic component, such as plastic-coated aluminum, that shall be suitable for transmitting an electric current to aide in locating buried pipes.

4.12.3 Marker Balls for Curvilinear Sewers, Stub-Outs and Laterals:

Gravity sewer pipe marker balls shall be 3M Sewer Locator Balls or equal as approved by the Agency.

4.12.4 Marker Balls for Force Mains and Reuse Lines

Force main and reuse line marker balls shall be unpowered, programmable 3M Sewer Locator Balls or equal as approved by the Agency. Marker balls shall be capable of accepting and be programmed for the following data:

- Agency Name
- Type: FM or RU
- Pipe Size
- Pipe Material
- Pump Station Number
- Design invert elevation of pipe
- Address of Pump Station Force Main Serves
- Change in Horizontal or Vertical Direction

4.13 VALVES

4.13.1 Air-Vacuum and Air-Release Valves:

Engineer shall contact the Agency for manufacturers and model numbers of approved air-vacuum and air-release valves. Generally the valves shall be specifically manufactured for sewage applications and shall have screwed ends. Valve bodies and all moving metal parts shall be Type 316 stainless steel. Seat washers and gaskets shall be of a material insuring water tightness with a minimum of maintenance. Valve seats shall be drip tight at the minimum operating pressure. Valves shall be designed for normal operation at a water working pressure equal to the design pressure of the pipeline and shall be factory-tested under a hydrostatic pressure of at least 300 psi.

4.13.2 Discharge and Suction Line Valves:

Engineer shall contact the Agency for manufacturers and model numbers of approved discharge and suction line valves for sewage force main service.

4.13.3 Check Valves:

Engineer shall contact the Agency for manufacturers and model numbers of approved check valves.

4.14 PAINTINGS AND COATINGS

Engineer shall contact the Agency for required paints and coatings for specific sanitary system applications.

4.15 REINFORCING STEEL

Reinforcing steel shall conform to the following reference standards as applicable to the function of the structure:

- ACI 318-05 Building Code Requirements for Structural Concrete
- ACI 350-01 Code Requirements for Environmental Engineering Concrete Structures
- ACI 350.3-01 Seismic Design of Liquid Containing Concrete Structures

4.16 GROUT AND DRY PACKS

Grout mix shall consist of one part, Type V or equivalent high sulfide resistant Portland cement, one part fine sand, and one part additive such as Five Star Grout by U.S. Grout Corporation, or Agency approved equal. A batch shall consist of equal portions of the above parts established by weight; with only sufficient water added equivalent to 5.5 gallons per bag of cement.

DESIGN AND CONSTRUCTION STANDARDS

SECTION 5

STANDARD DRAWINGS

DESIGN AND CONSTRUCTION STANDARDS

STANDARD DRAWINGS SECTION 5

TABLE OF CONTENTS

Title	Standard Drawing No.
Standard Pre-Cast Manhole	SD-1A
Standard Pre-Cast Manhole	SD-1B
Standard Concentric Dual Manhole Cover and Frame	SD-2
Standard Eccentric Dual Manhole Cover and Frame	SD-3
Manhole Concrete Collar	SD-4
Grade Ring Sequence	SD-5
Standard Manhole Steps	SD-6
Cast-in-Place Manhole Base Installed in Existing Sewer	SD-7
Removal of Existing Manhole	SD-8
Typical Flow Channel Details	SD-9
Force Main Connections to Private Sewer Manhole	SD-10
Force Main Connections to Public Sewer Manhole	SD-11
Special Manholes-Agency Authorization Required	SD-12
Special Shallow Manholes	SD-13
Pipe Bedding Methods	SD-14
Pipe Bedding, Haunch Support and Initial Cover	SD-15
Trench Section for Sewer Mains Within Subdivision and Unpaved Areas	SD-16
Typical Trench Section for Paved Areas – 60’ or Less R/W	SD-17
Typical Trench Section Backfill for Paved Areas – Greater Than 60’ R/W	SD-18
Typical Underground Utility Locations in Street (Conform to RTC Standard 501, Latest Edition)	SD-19
Replacement of Existing Sanitary Sewer or Lateral Over New Utility	SD-20
Protection of Sanitary Sewer Under a Utility	SD-21
Lateral Connection to Sewer Main 12” Dia and Smaller	SD-22
Lateral Connections to Sewer Mains 12” Dia and Smaller Around Obstructions	SD-23
Lateral Connections to Sewer Mains 15” and Larger	SD-24
Sewer Lateral Marker	SD-25
Lateral Cleanout	SD-26

DESIGN AND CONSTRUCTION STANDARDS

STANDARD DRAWINGS
SECTION 5

TABLE OF CONTENTS (Continued)

Title	Standard Drawing No.
Deep Lateral Connection	SD-27
Typical Sewer Easement Requiring Block Walls	SD-28A
Typical Sewer Easements Requiring Block Walls	SD-28B
Residential Sewer Backwater Valve	SD-29
Approved Trap for Sewer Line Construction	SD-30
Below Grade Air Relief Valves	SD-31
Above Grade Air Relief Valves	SD-32
Rigid Pipe Field Closure	SD-33
Pretreatment Sampling Manhole	SD-34
Typical Siphon Outlet Structure	SD-35A
Typical Siphon Inlet Structure	SD-35B
Typical Force Main Clean-Out	SD-36A
Typical Force Main Clean-Out	SD-36B
Debris Screen	SD-37
Bollard Detail (Removable, Locking)	SD-38

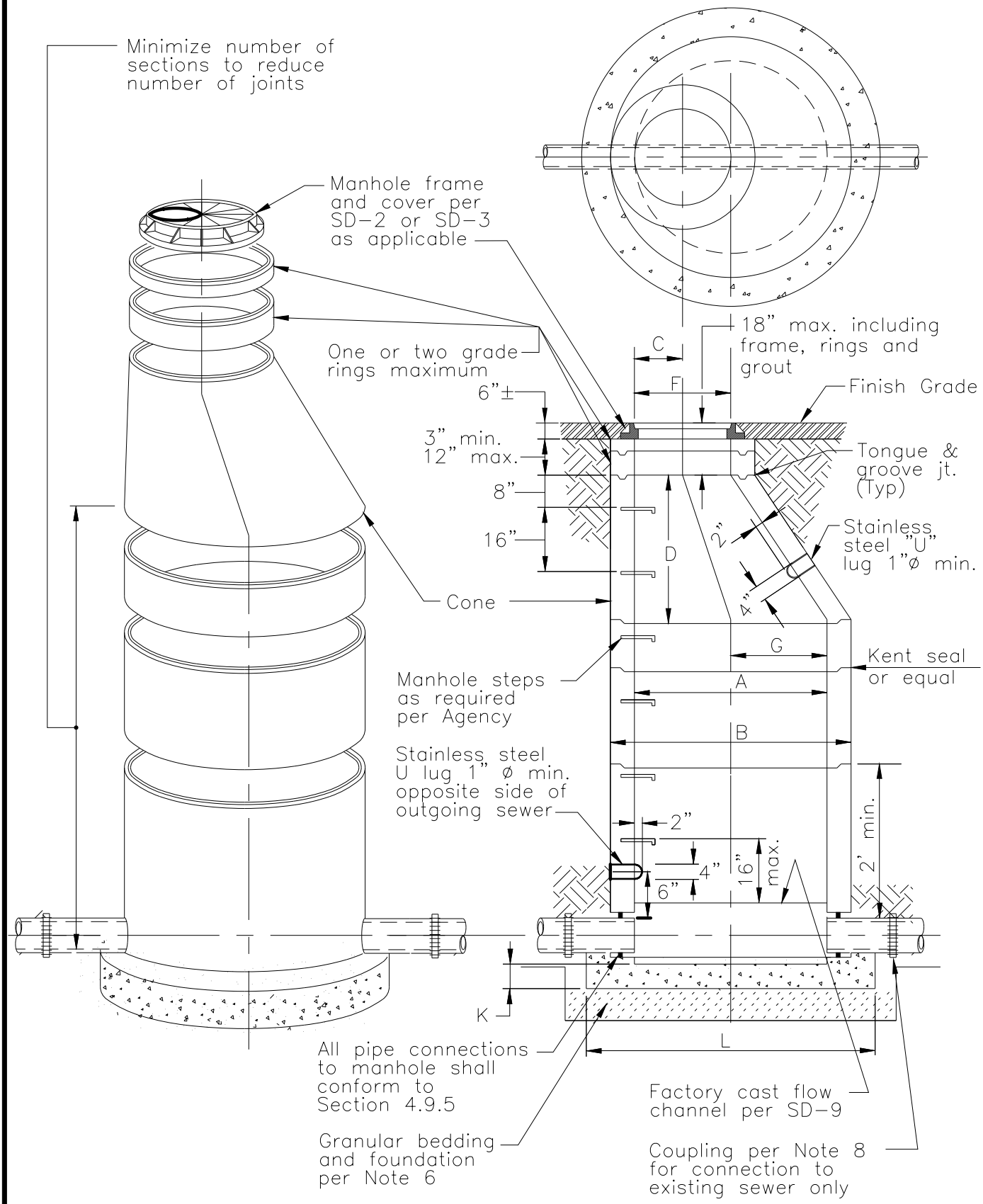

STANDARD PRE-CAST MANHOLE

ISSUED:	NUMBER: SD-1A

TABLE OF DIMENSIONS												
Size	A	B	C	D*	E	F	G	H	I	J	K	L
48	48	58	18	36	—	36	12				4	62
60	60	72	18	36	—	36	24				8	80
72	72	86	18	36	—	36	36				8	94

* Varies per manufacturer

NOTES:

1. Pre-cast concrete manhole sections and adjusting rings shall conform to ASTM C-478 and Section 4.9.1.
2. Provide interior corrosion protection meeting Agency requirements and Section 2.2.10. See Detail A below for PVC liner installation in pre-cast MH base.
3. In high groundwater areas and where directed by the Agency, seal exterior of pre-cast manhole sections with bitumastic or equal waterproofing coating and provide double Kent Seal or equal joint seals between all pre-cast sections including adjusting rings.
4. Manhole step placement shall conform to OSHA requirements and steps shall be placed 180 degrees from outgoing sewer.
5. In unstable soil conditions and where directed by the Agency, a second pipe joint shall be placed within 3-feet of each manhole connection.
6. Where the trench bottom is undisturbed soil, 4-inches of granular bedding material meeting Agency requirements shall be placed under the pre-cast manhole base. Where the trench bottom has been disturbed and in fill areas, 12-inches of granular bedding meeting Agency requirements shall be placed under the pre-cast manhole base. Provide additional suitable foundation per Section 3.13 and as required by the Agency in areas of unstable trench bottom, wet conditions, over-excavation, rocky trench bottom and elsewhere as directed by the Agency.
7. Pre-cast manhole bases shall be used for construction of new sewer systems, whether publicly or privately owned. Pre-cast manhole bases or cast-in-place manhole bases per SD-9 may be used at the contractor's option for new manholes being installed along existing sanitary sewers.
8. Fernco, Mission, or equal flexible rubber couplings conforming to Section 4.9.6 shall be provided for connections to existing sewers where new manholes are installed.

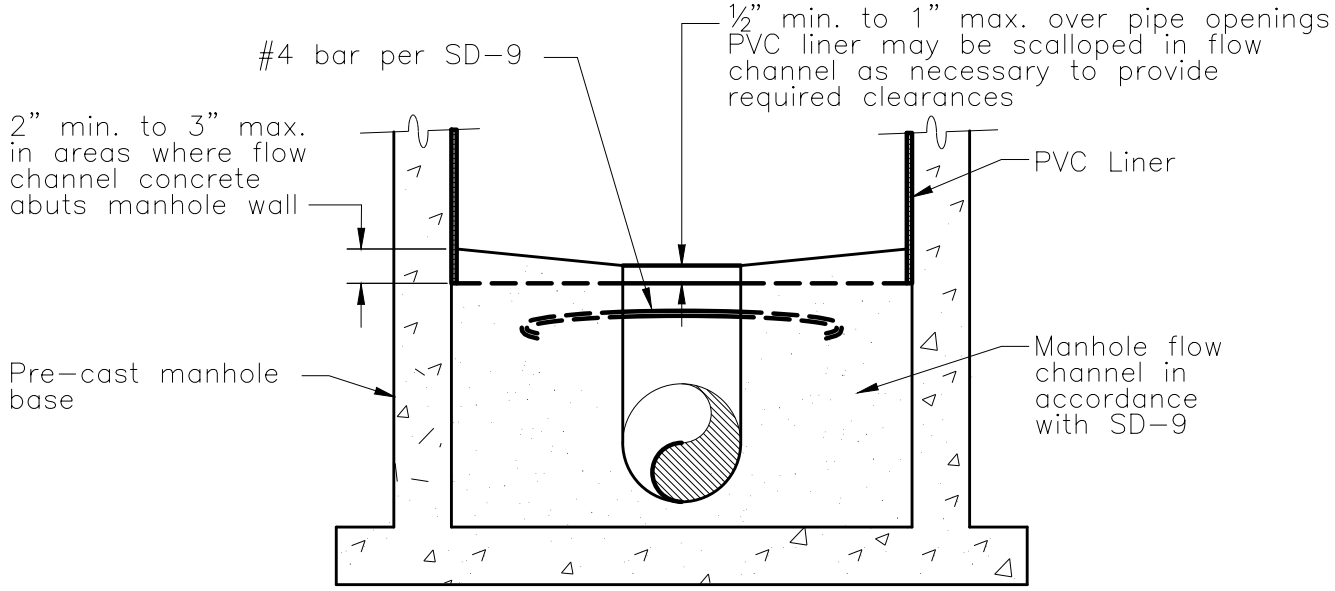

DETAIL A

PVC Liner Installation

STANDARD PRECAST MANHOLE

ISSUED:	NUMBER: SD-1B

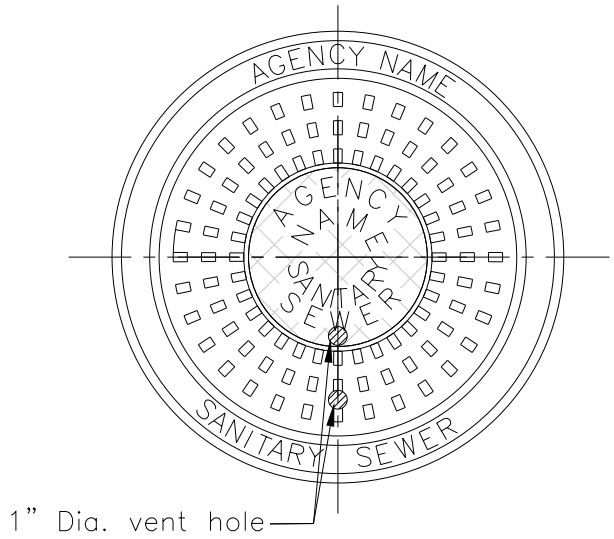

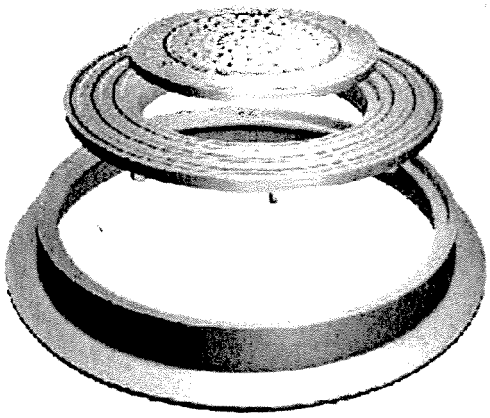

COVER

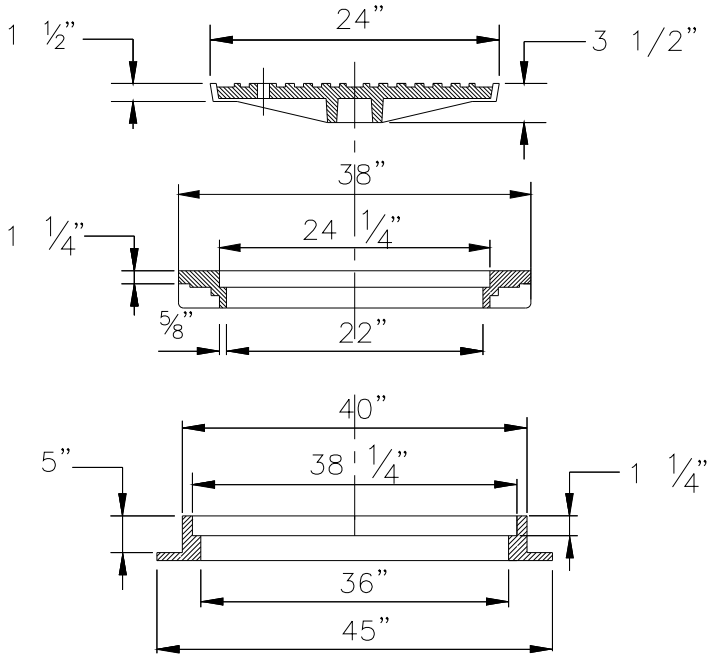

NOTES:

1. Contact Agency for approved frame/cover manufacturers and casting numbers.
2. Cast iron shall meet ASTM A–48 and have minimum tensile strength of 35000 lbs/sq. inch.
3. Mating surfaces of frame and cover shall be machined to fit without rocking with covers in any position within frame or outer cover.
4. Weight of frame and cover 800 lbs. minimum.
5. Name of Agency if public. Both inner and outer cover shall have Agency name.
6. Private manholes shall be marked "PRIVATE" where "Agency Name" is shown above.
7. Concentric dual cover shall be used for manholes without steps.
8. Outer 36–inch and inner 24–inch cover shall be bolted where required by Agency.

STANDARD CONCENTRIC DUAL MANHOLE COVER AND FRAME

ISSUED:	NUMBER: SD-2

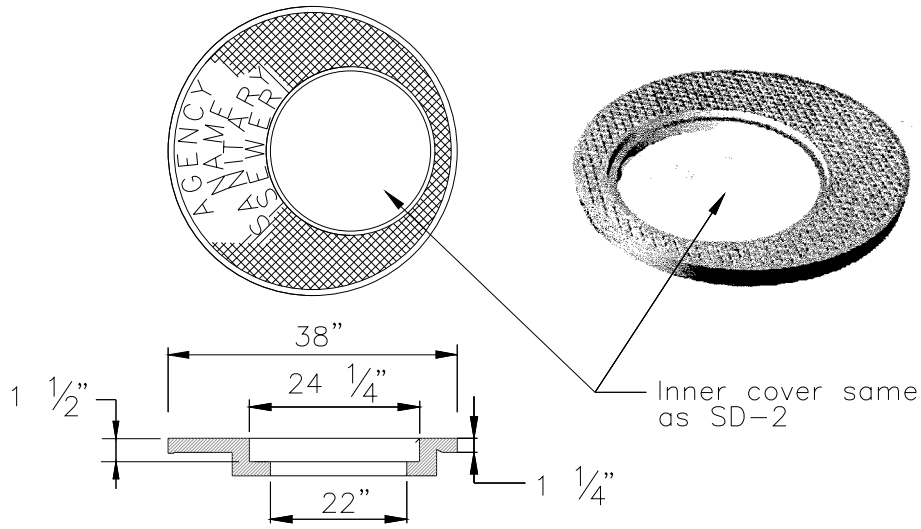

COVER

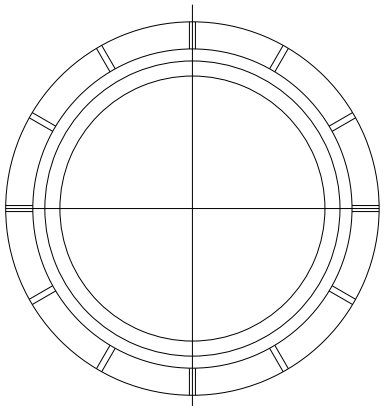

RING

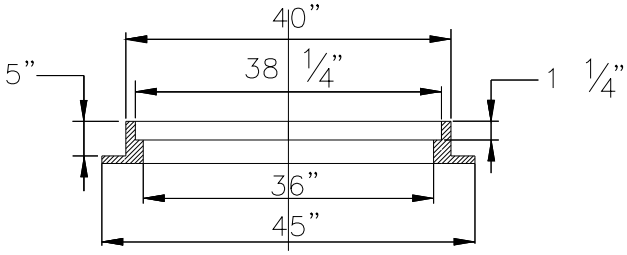

NOTES:

1. Contact Agency for approved frame/cover manufacturers and casting numbers.
2. Cast iron shall meet ASTM A-48 and have minimum tensile strength of 35000 lbs/sq. inch.
3. Mating surfaces of frame and cover shall be machined to fit without rocking with covers in any position within frame or outer cover.
4. Weight of frame and cover 800 lbs. minimum.
5. Name of Agency if public. Both inner and outer cover shall have Agency name.
6. Private manholes shall be marked "PRIVATE" where "Agency Name" is shown above
7. Eccentric dual cover shall be used for manholes with steps.
8. Outer 36-inch cover and inner 24-inch cover shall be bolted where required by Agency.

STANDARD ECCENTRIC DUAL MANHOLE COVER AND FRAME

ISSUED:	NUMBER: SD-3

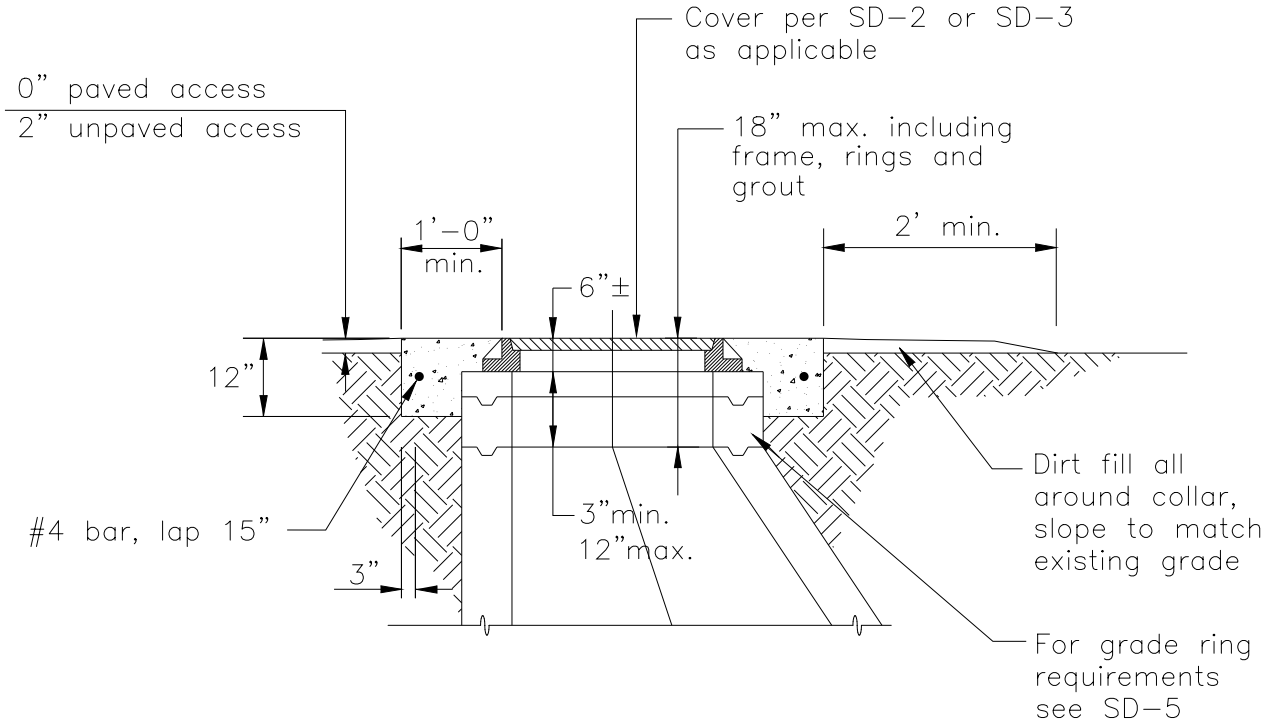

MANHOLE CONCRETE COLLAR

NOTES:

1. Concrete shall be type V 3000 psi per Section 4.11.
2. Collars for paved and landscaped areas shall be circular. Collars for unimproved areas may be circular or square.

MANHOLE CONCRETE COLLAR	
ISSUED:	NUMBER: SD-4

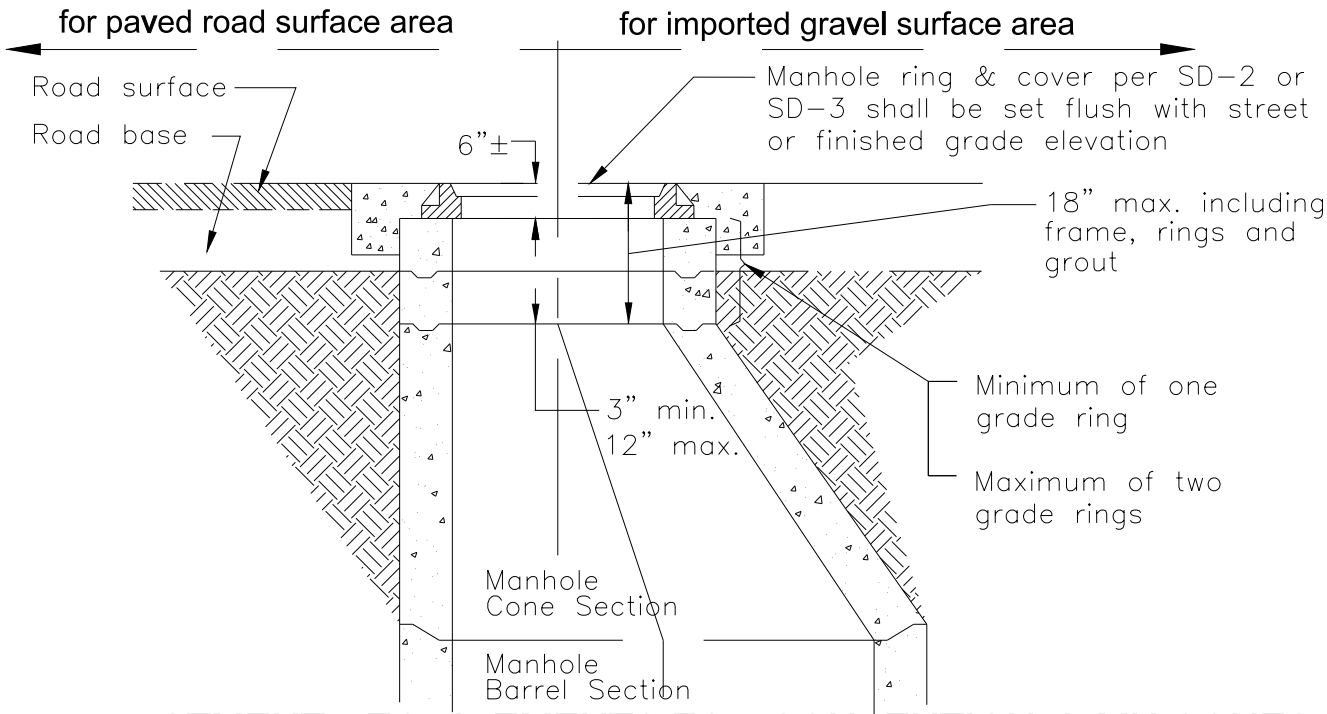

ADJUSTMENT REQUIREMENTS FOR CONVENTIONAL MH CONES

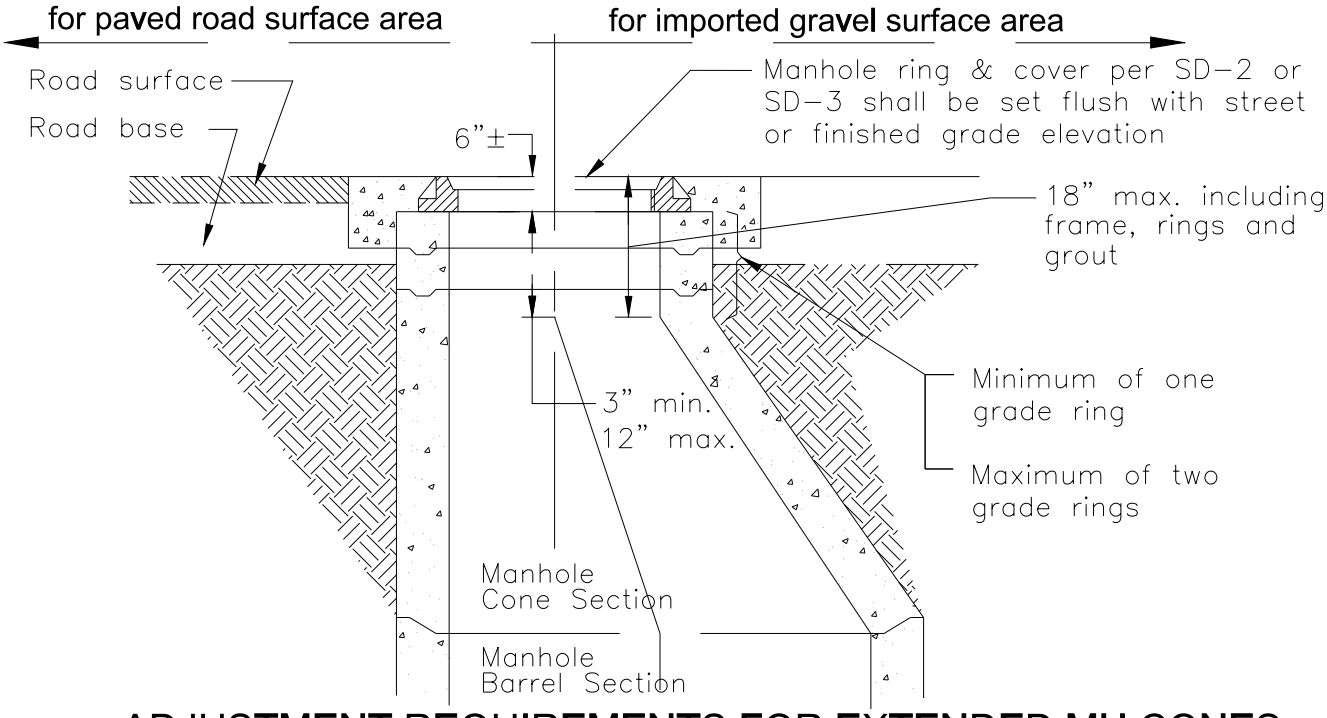

ADJUSTMENT REQUIREMENTS FOR EXTENDED MH CONES

NOTES

1. Manhole frame and grade rings shall be installed fully concentric with top opening of manhole cone.
2. Final grade adjustment shall be 3" min. to 12" max including grade rings and grout.
3. Grade rings shall be reinforced concrete 2"min. thickness to 11"max. thickness.
4. Grout for setting grade rings and MH frame shall meet Section 4.9.8, and shall be placed across the full width of grade ring and frame, and shall be $\frac{1}{2}$"min. to 1"max. n thickness.

GRADE RING SEQUENCE

ISSUED:	NUMBER: SD-5

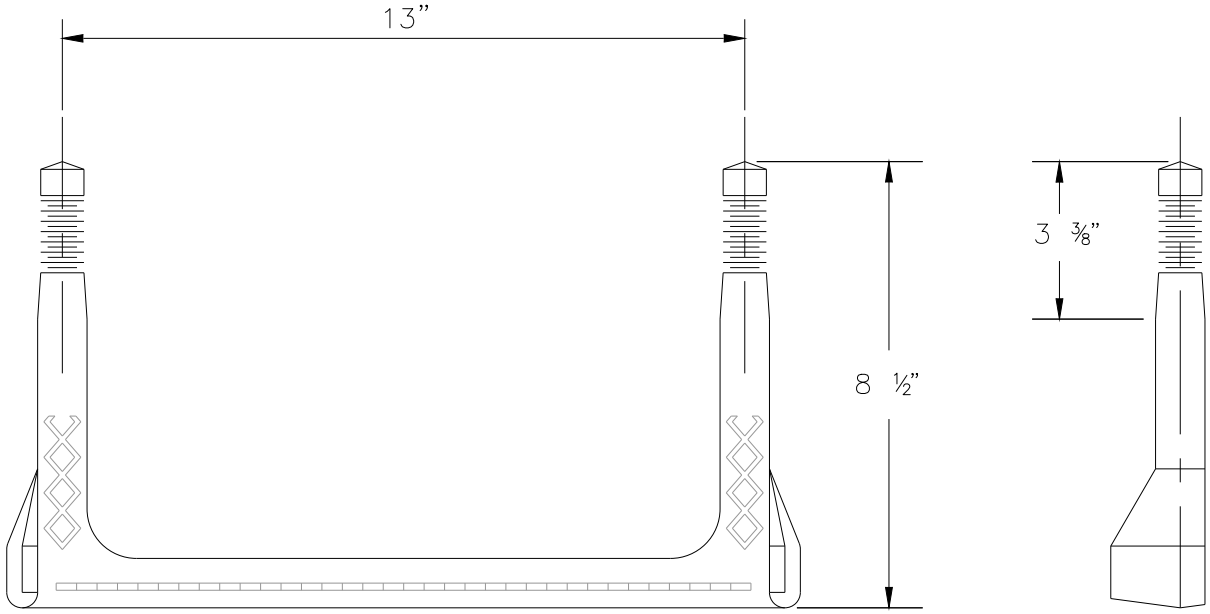

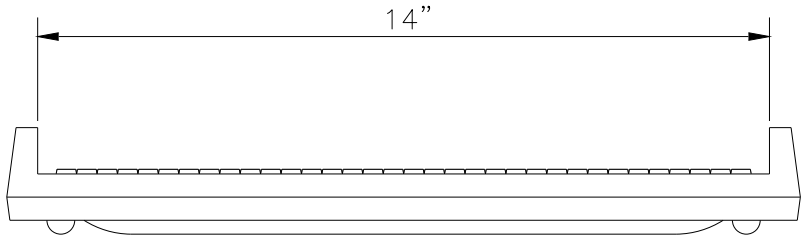

MANHOLE STEPS

As required by Agency

NOTE:
All steps shall be epoxied in place during the manhole barrel fabrication process using epoxy as recommended by step manufacturer. Steps may not be field installed. Epoxy shall be resistant to degradation by sanitary wastewater and hydrogen sulfide.

GENERAL NOTES

1. Manhole step shall conform to ASTM C–478, ASTM C–497 and Section 4.9.3.

2. Reinforced plastic steps shall be polypropylene plastic coated, with an inner deformed steel reinforcing rod (Grade 60/ASTM A–615).

3. Steps and installation shall conform to OSHA requirements.

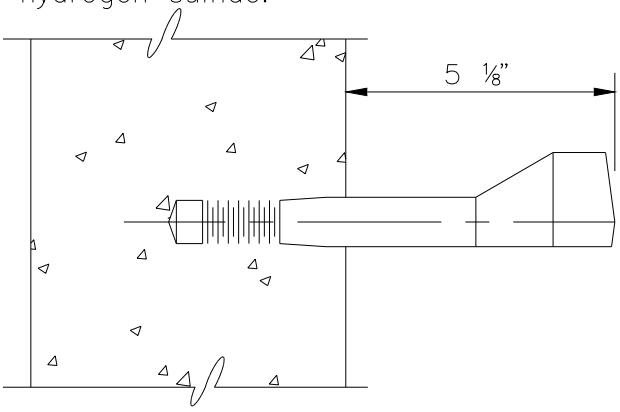

STANDARD MANHOLE STEPS

ISSUED:	NUMBER: SD-6

TABLE OF DIMENSIONS											
Size	A	B	C*	D*	E	F*	G*	H	I	J	K
48	48	58			–				4		9
60	60	72			–				6		12
72	72	86			–				8		16

*See SD-1B

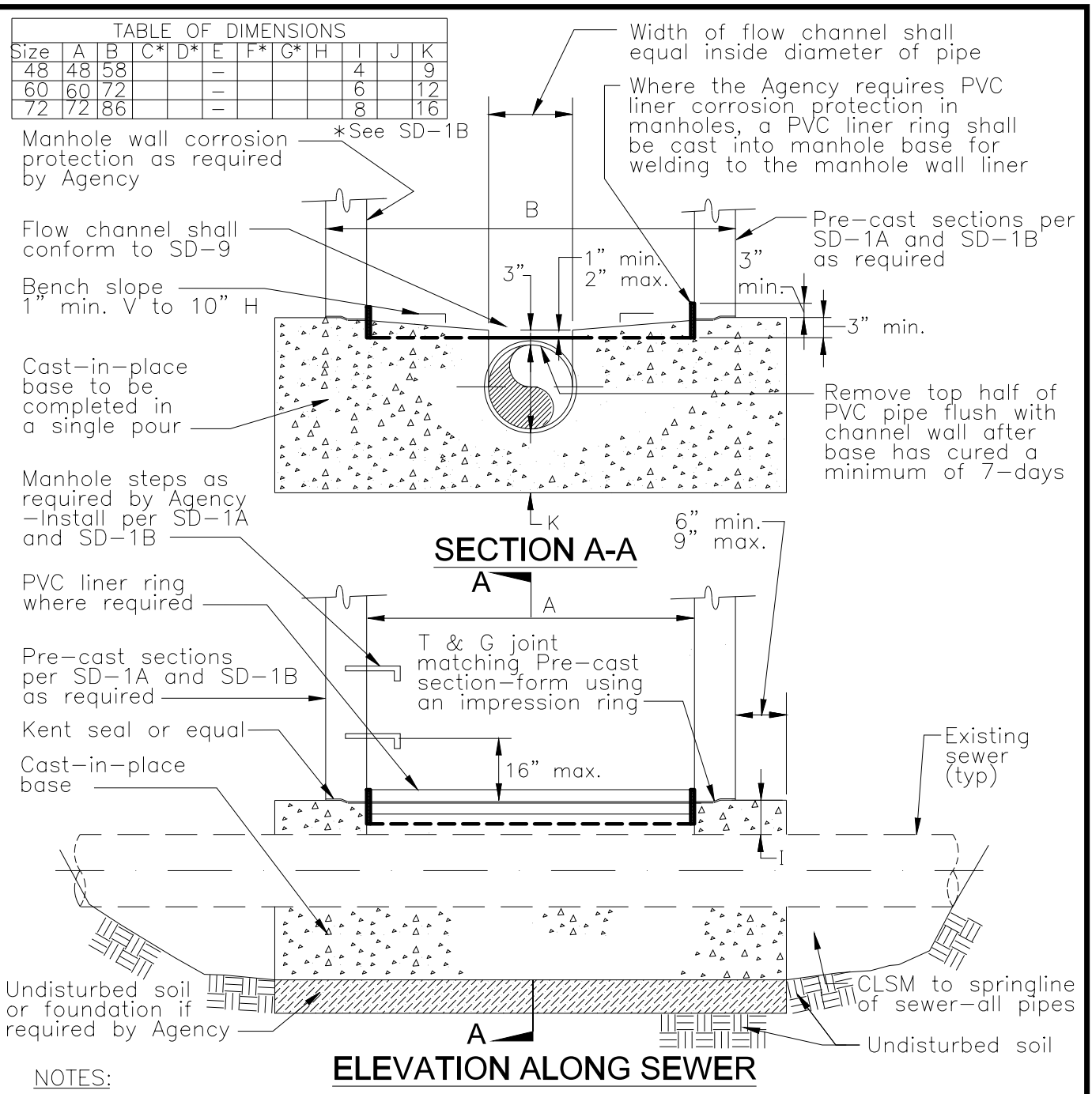

NOTES:

1. Along existing sewers only, cast-in-place manhole base may be used in lieu of pre-cast base for new manholes.
2. Concrete shall conform to Section 4.11.
3. Base may be round or square.
4. Provide suitable foundation per Section 3.13 and as required by the Agency in areas of unstable trench bottom, wet conditions, over-excavation, rocky trench bottom, and elsewhere as directed by the Agency.
5. If existing sewer pipe is damaged or if a pipe joint falls within the manhole base pour, the existing sewer pipe shall be replaced with PVC per Section 4.6.1. The replacement PVC pipe shall be reconnected to the existing sewer using flexible couplings per Section 4.9.6.

CAST-IN-PLACE MANHOLE BASE INSTALLED IN EXISTING SEWER

ISSUED:

NUMBER: SD-7

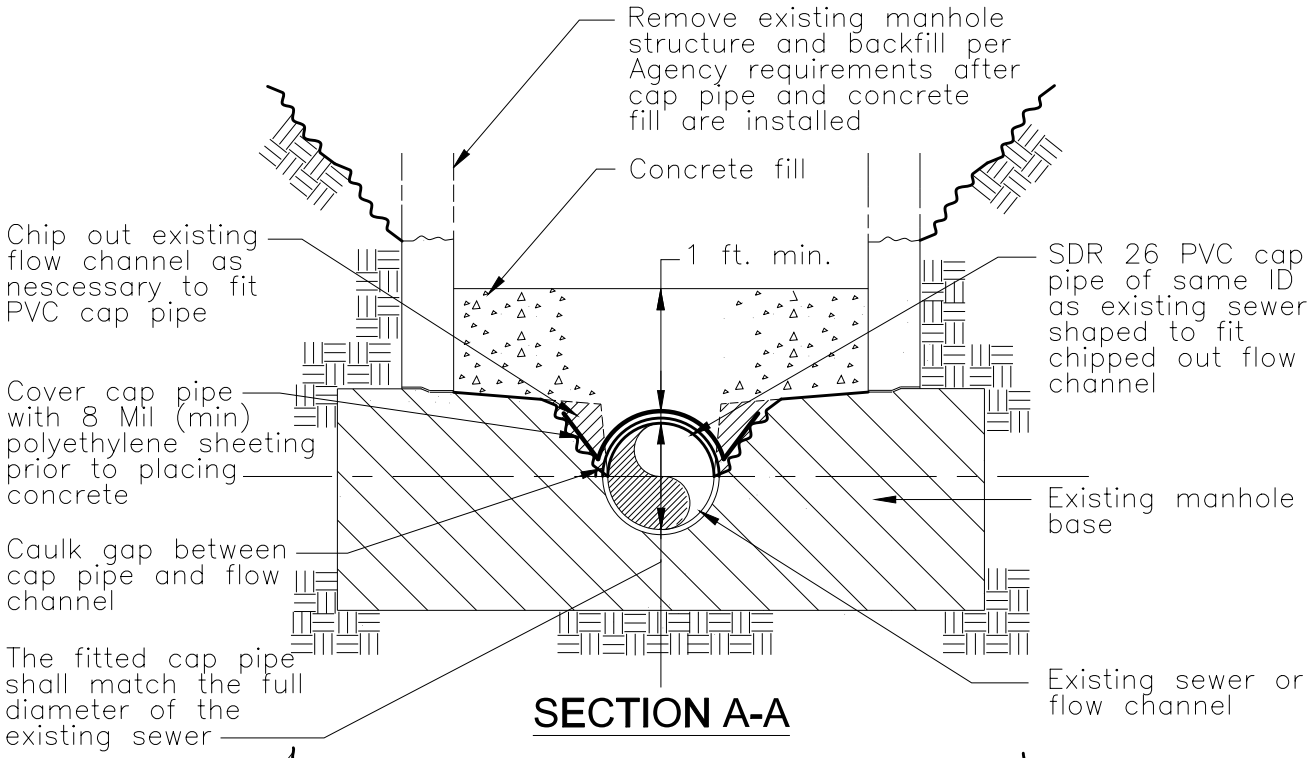

SECTION A-A

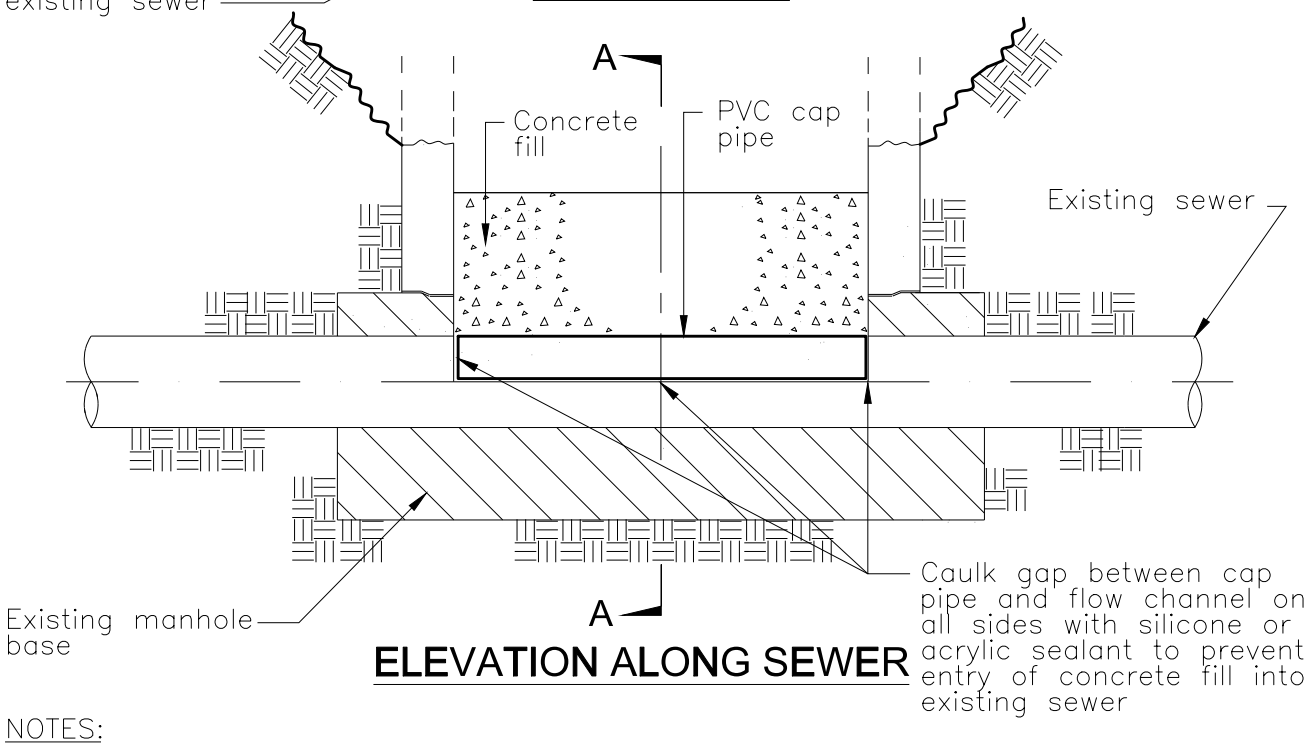

ELEVATION ALONG SEWER

NOTES:

1. To be used as directed by the Agency where an existing manhole is to be abandoned but the existing sewer is to remain in service.
2. Concrete fill material shall be 4-inch slump and otherwise conform to Section 4.11.
3. Agency representative shall inspect cap pipe installation before concrete fill is placed.
4. Televise existing sewer after cap and fill are placed but before manhole is backfilled.

REMOVAL OF EXISTING MANHOLE

ISSUED:	NUMBER: SD-8

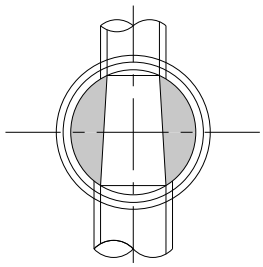

THROUGH PIPE

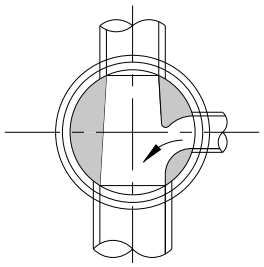

THROUGH PIPE
ONE LATERAL

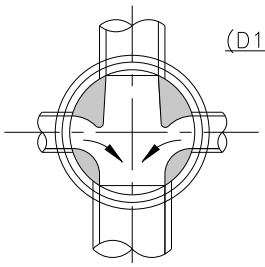

THROUGH PIPE
TWO LATERAL

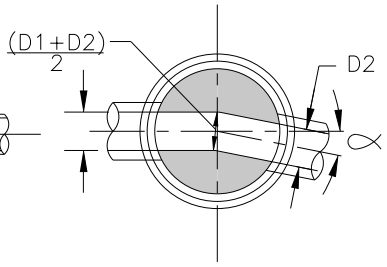

SLIGHT ANGLE
$0^\circ \leq \alpha < 15^\circ$

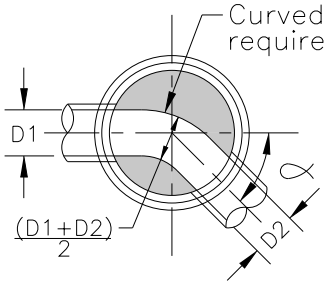

INTERMEDIATE ANGLE
$15^\circ \leq \alpha < 45^\circ$

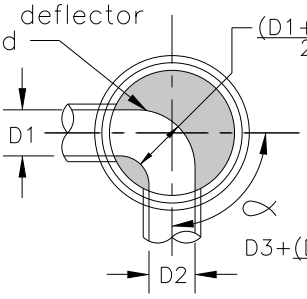

SHARP ANGLE
$45^\circ \leq \alpha = 90^\circ$

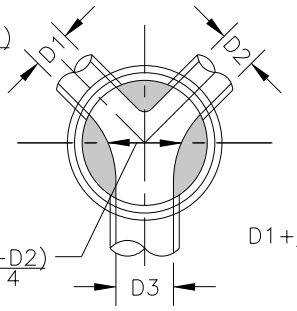

ANGLED LATERALS

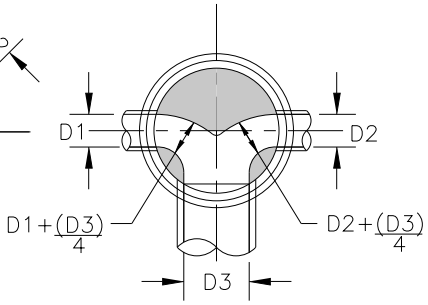

OPPOSED LATERALS

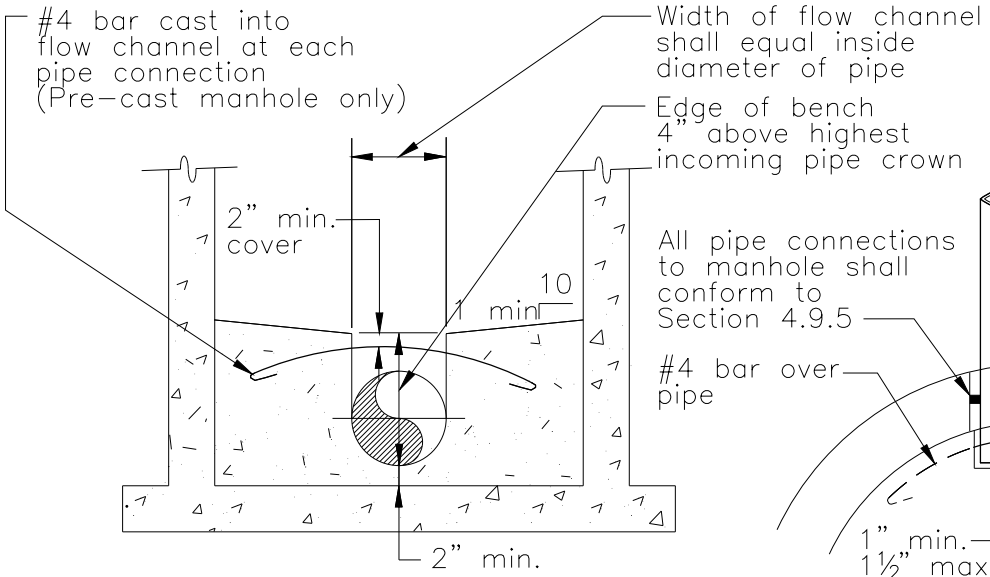

TYPICAL FLOW CHANNEL CROSS SECTION FOR PRE-CAST OR CAST-IN-PLACE MANHOLE BASE

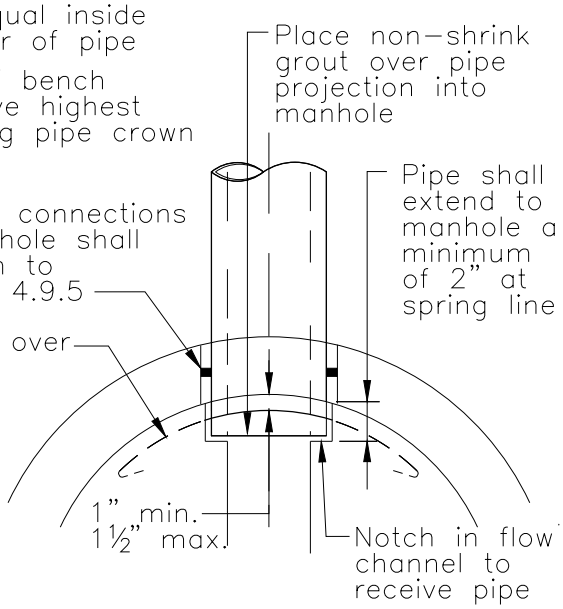

PLAN OF PIPE CONNECTION FOR PRE-CAST MANHOLE

NOTES:

1. Flow channels in pre-cast manholes shall be cast in the factory.
2. Flow channels in cast-in-place manhole bases shall be formed to same contours as pre-cast manhole flow channels.
3. Provide manhole corrosion protection as required by Agency.

TYPICAL FLOW CHANNEL DETAILS

ISSUED:	NUMBER: SD-9

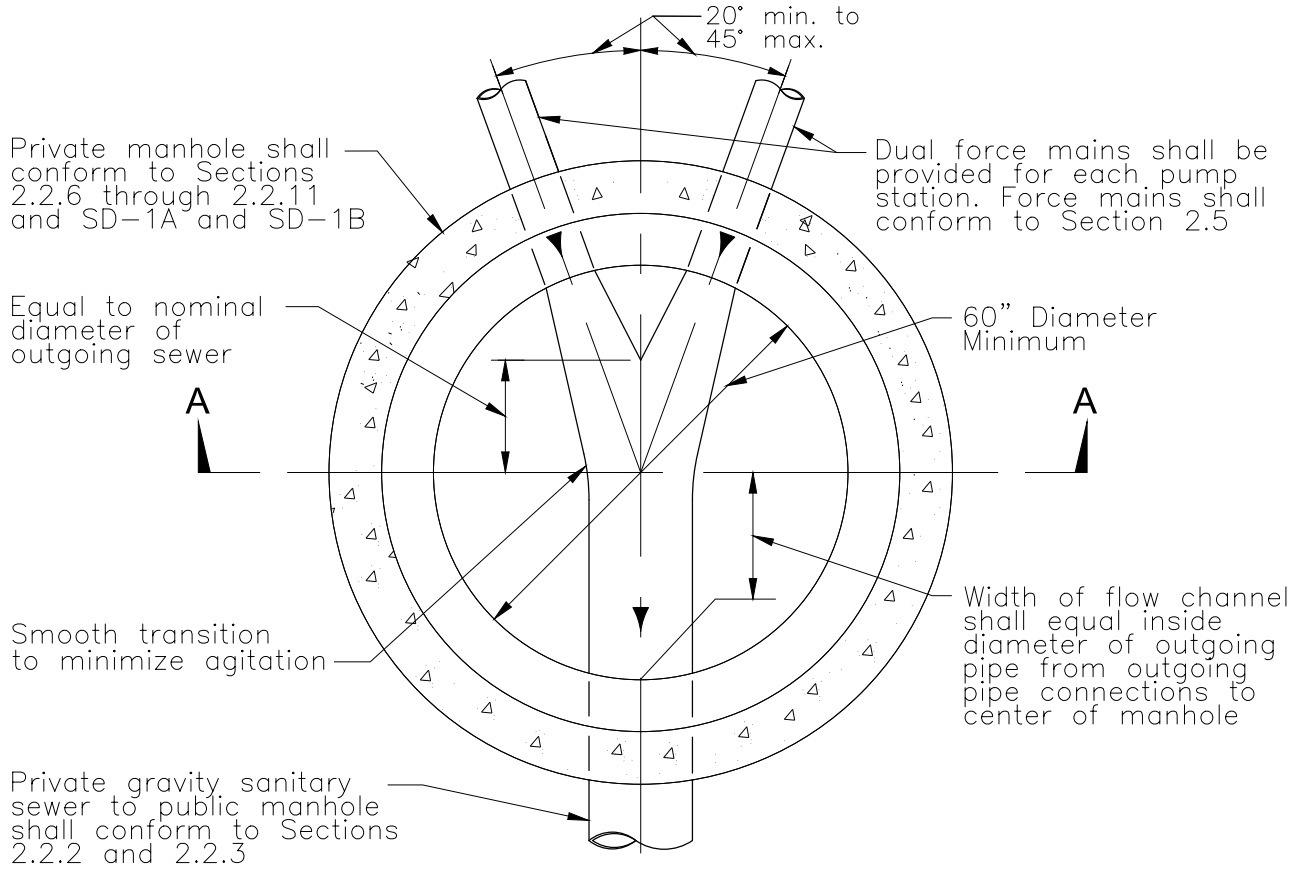

PLAN

NOTE:
Manholes shall have corrosion protection as required by Agency

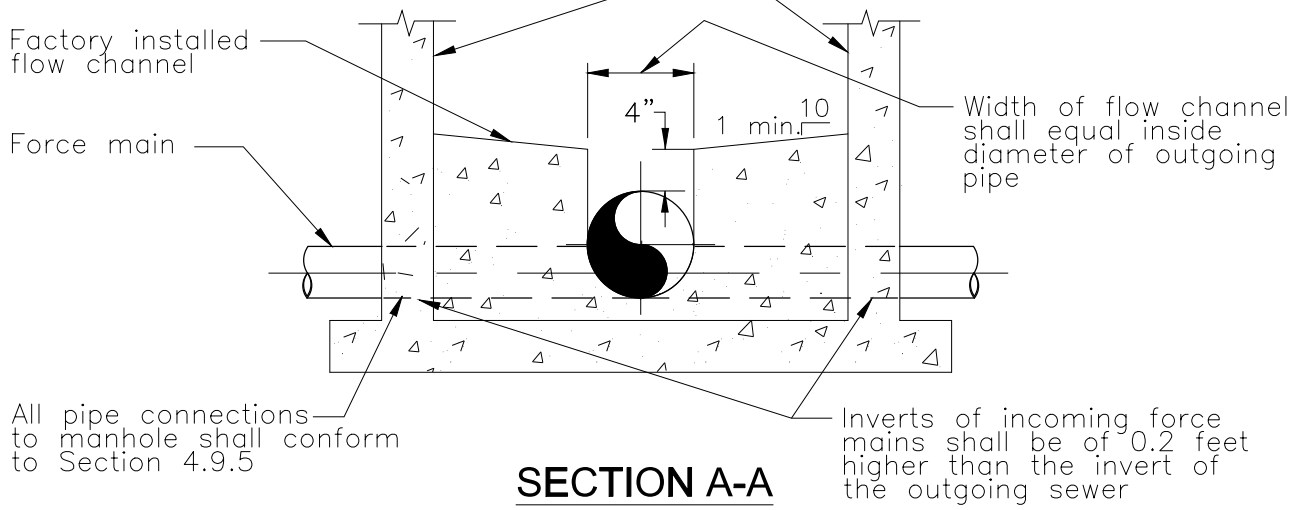

SECTION A-A

NOTE:

1. Private force mains shall discharge into a private manhole and then flow by gravity through a private sewer that discharges into a public manhole on the public sanitary sewer main.

FORCE MAIN CONNECTIONS TO PRIVATE SEWER MANHOLE

ISSUED:	NUMBER: SD-10

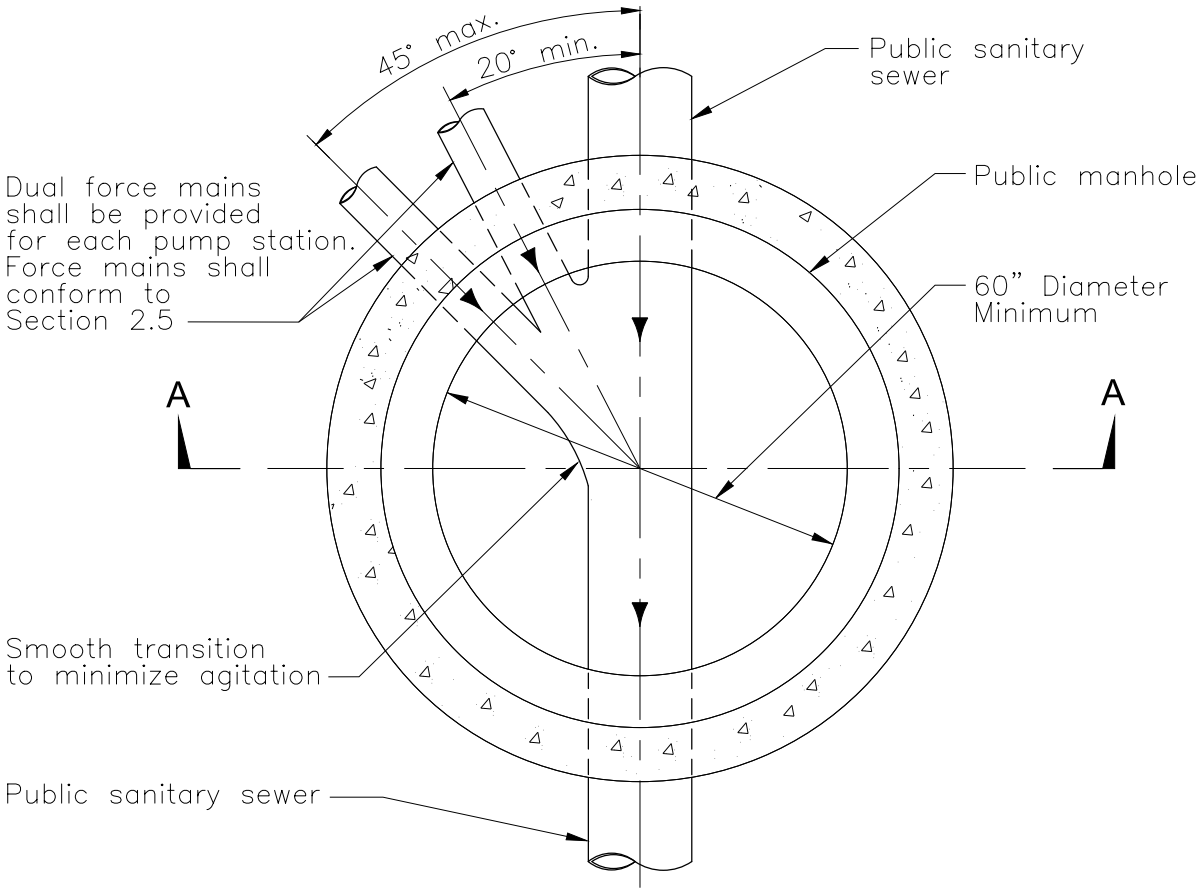

PLAN

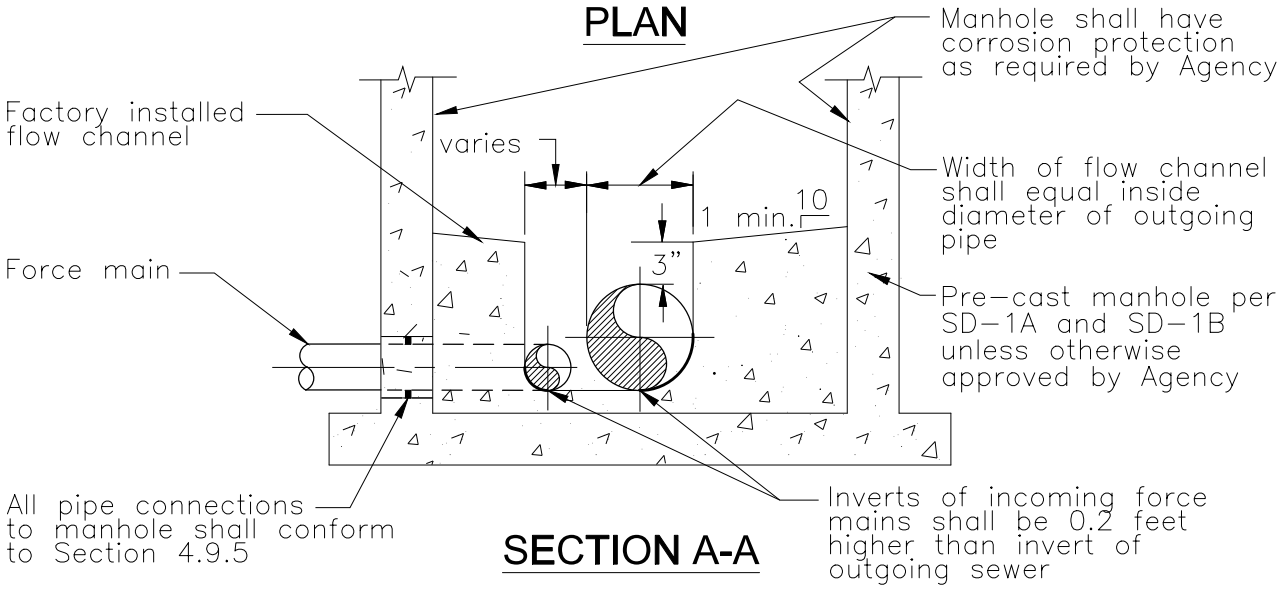

SECTION A-A

NOTES:

1. Force mains to Public sewer may be used only if authorized by Agency.
2. New manhole required.
3. Cast-in-place base may be used only if authorized by Agency.

FORCE MAIN CONNECTIONS TO PUBLIC SEWER MANHOLE

ISSUED:	NUMBER: SD-11

NOTES:

1. Manhole shall conform to SD-1A and SD-1B.
2. Flow channel shall conform to SD-9.
3. Special manholes upon Agency approval.
4. Wye, piping and elbows shall be one size larger than the incoming sewer line. Material shall be SDR 26 PVC.
5. High drop and low drop connections may be used only where no other lateral connection alternative including parallel sewer per SD-24 is possible.
6. Manholes receiving high drop and low drop, connections shall have corrosion protection as required by Agency.
7. All pipe connections to manhole shall conform to Section 4.9.5.

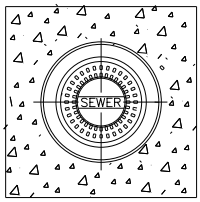

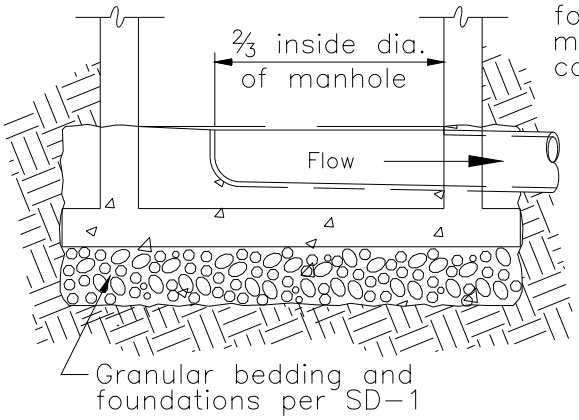

TERMINAL MANHOLE

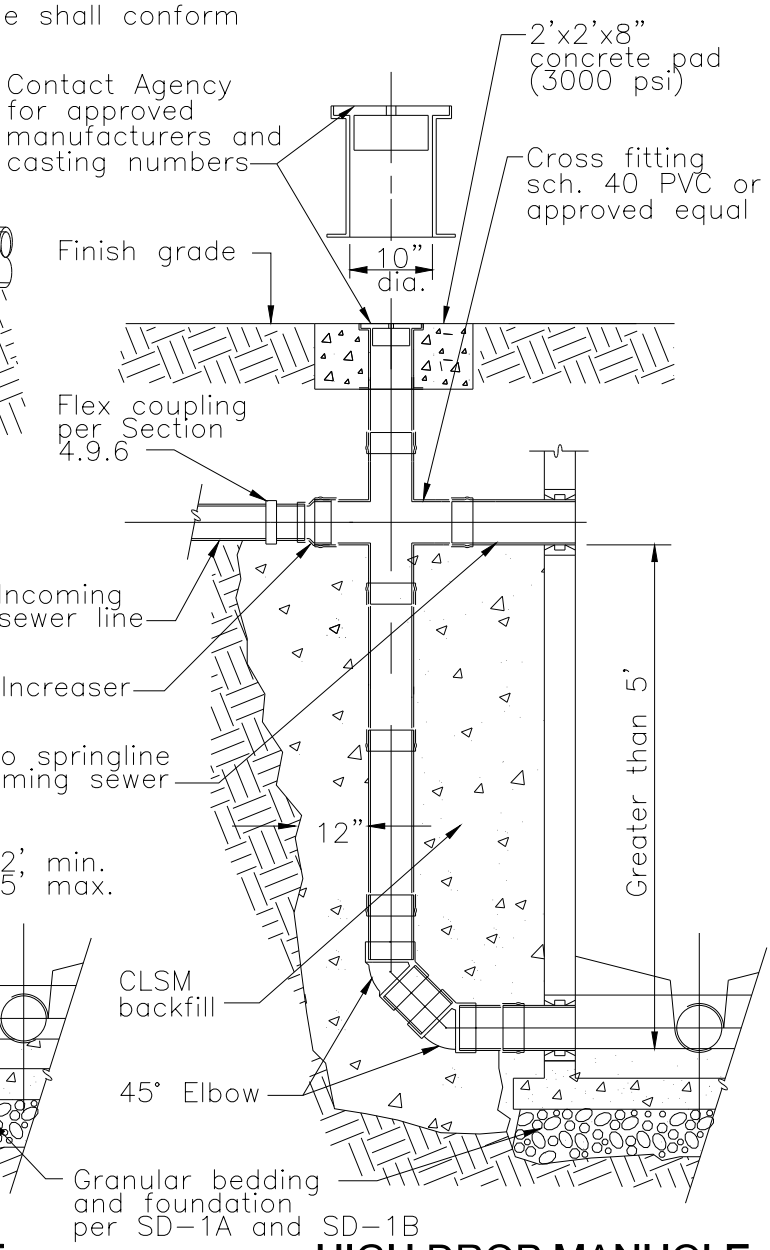

HIGH DROP MANHOLE

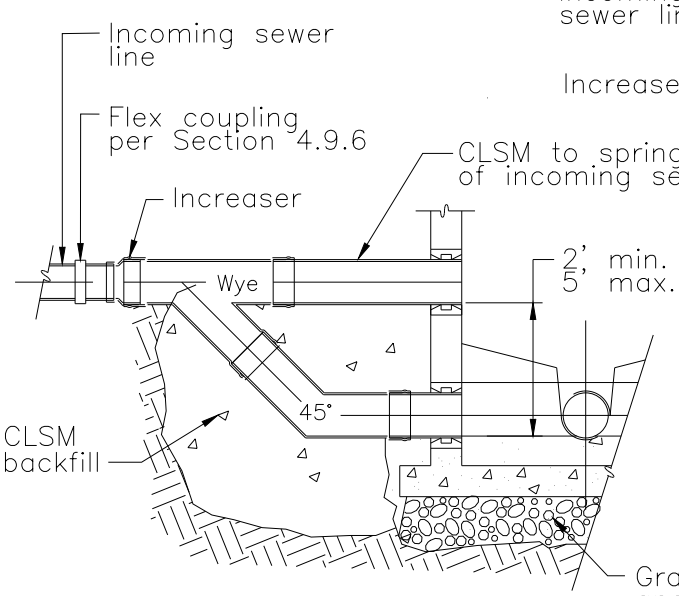

LOW DROP MANHOLE

SPECIAL MANHOLES-AGENCY AUTHORIZATION REQUIRED

ISSUED:	NUMBER: SD-12

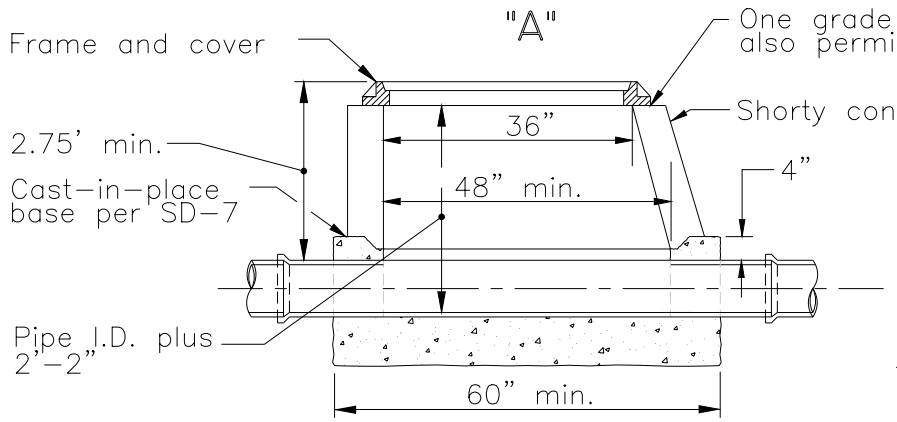

SPECIAL MH "A"
SHORTY CONE

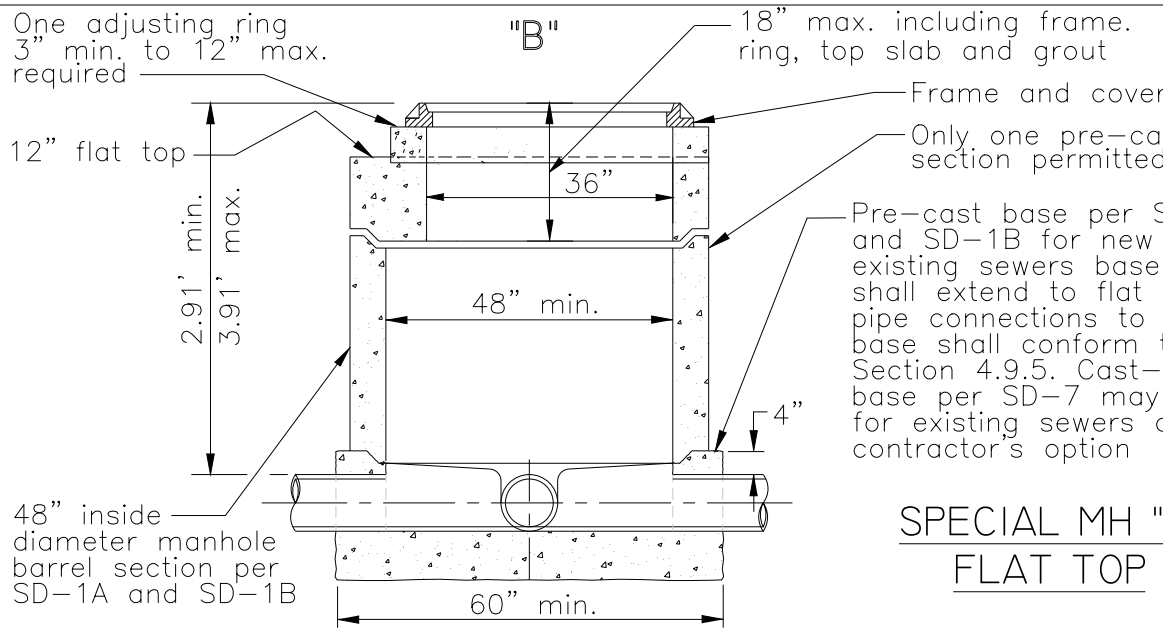

SPECIAL MH "B"
FLAT TOP

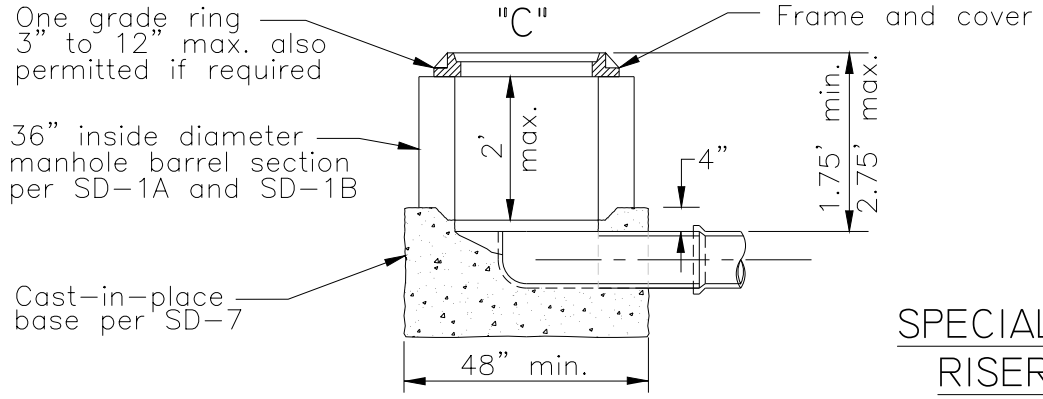

SPECIAL MH "C"
RISER RING

NOTES:

1. **Special shallow manholes may be used upon Agency approval only.**
2. Concrete collar required around manhole frame per SD-4.
3. Manhole frame and cover per SD-2 or SD-3 as applicable.
4. Flow channel per SD-9.
5. For shallow manholes sewer pipe having less than 5-feet of cover shall be C-900 PVC or DIP as required by Agency. The C-900 or DIP pipe shall extend to the next manholes upstream and downstream.
6. Granular bedding and foundation under special shallow manholes shall conform to SD-1A and SD-1B for pre-cast manhole bases and SD-7 for cast-in-place manhole bases.

SPECIAL SHALLOW MANHOLES

ISSUED:	NUMBER: SD-13

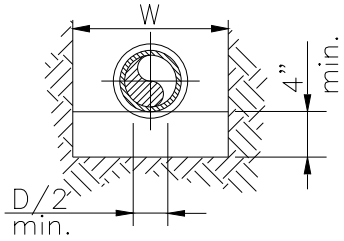

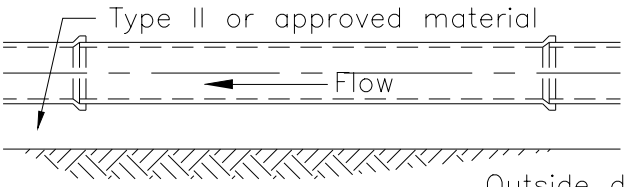

NORMAL BEDDING

(Unyielding material)

Outside diameter of the pipe barrel firmly bedded in a hand-shaped unyielding material

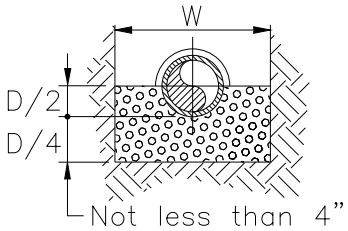

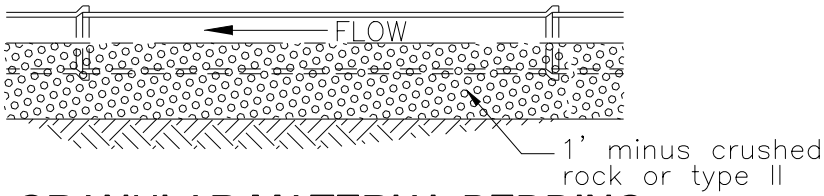

GRANULAR MATERIAL BEDDING

(Yielding material)

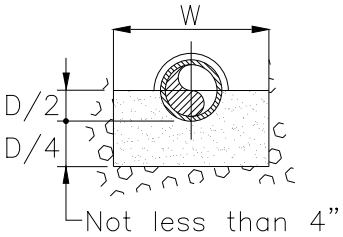

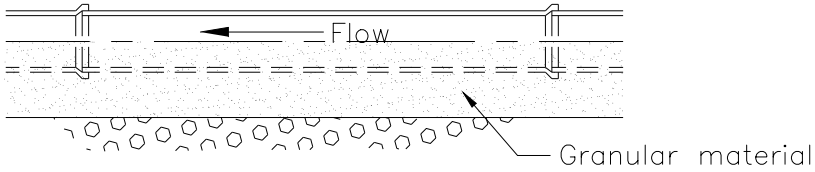

ROCK OR CALICHE-BEDDING

90% compaction

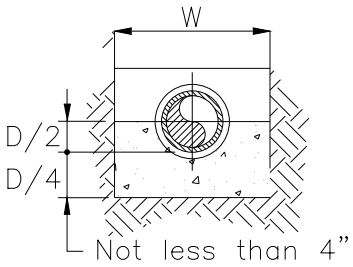

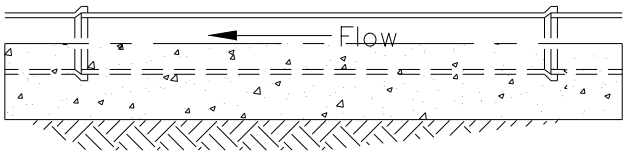

CONCRETE BEDDING

Size	B	A
6"	6"	6"
8"	6"	6"
10"	6"	6"
12"	6"	6"
15"	6"	6"
18"	6"	6"
21"	6"	6"
24"	6"	6"
27"	7"	6"
30"	8"	6"
33"	8"	6"
36"	9"	6"
39"	9"	6"
42"	10"	6"

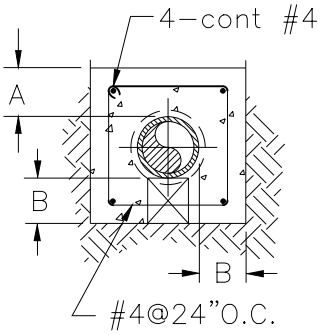

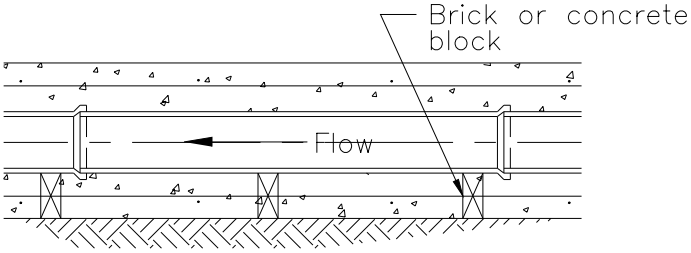

REINFORCED CONCRETE ENCASEMENT

D – Outside diameter of pipe

W – The width of the trench at the top of the flexible pipe shall be the diameter of the pipe plus 16" minimum. In any case, the width shall be sufficient for work in connection with laying, jointing, inspection, placing the bedding and to provide for the safety of workers and shall meet OSHA requirements.

NOTES:

1. All concrete to be type V, 3000 psi per Section 4.11.
2. In all of the above examples, bedding shall conform to Section 3.13.
3. For PVC pipe, bedding shall also conform to Uni-Bell PVC Pipe Association Handbook and pipe manufacturer's recommendations.
4. DIP shall be wrapped with a double layer of 8 mil poly-wrap.

PIPE BEDDING METHODS

ISSUED:

NUMBER: SD-14

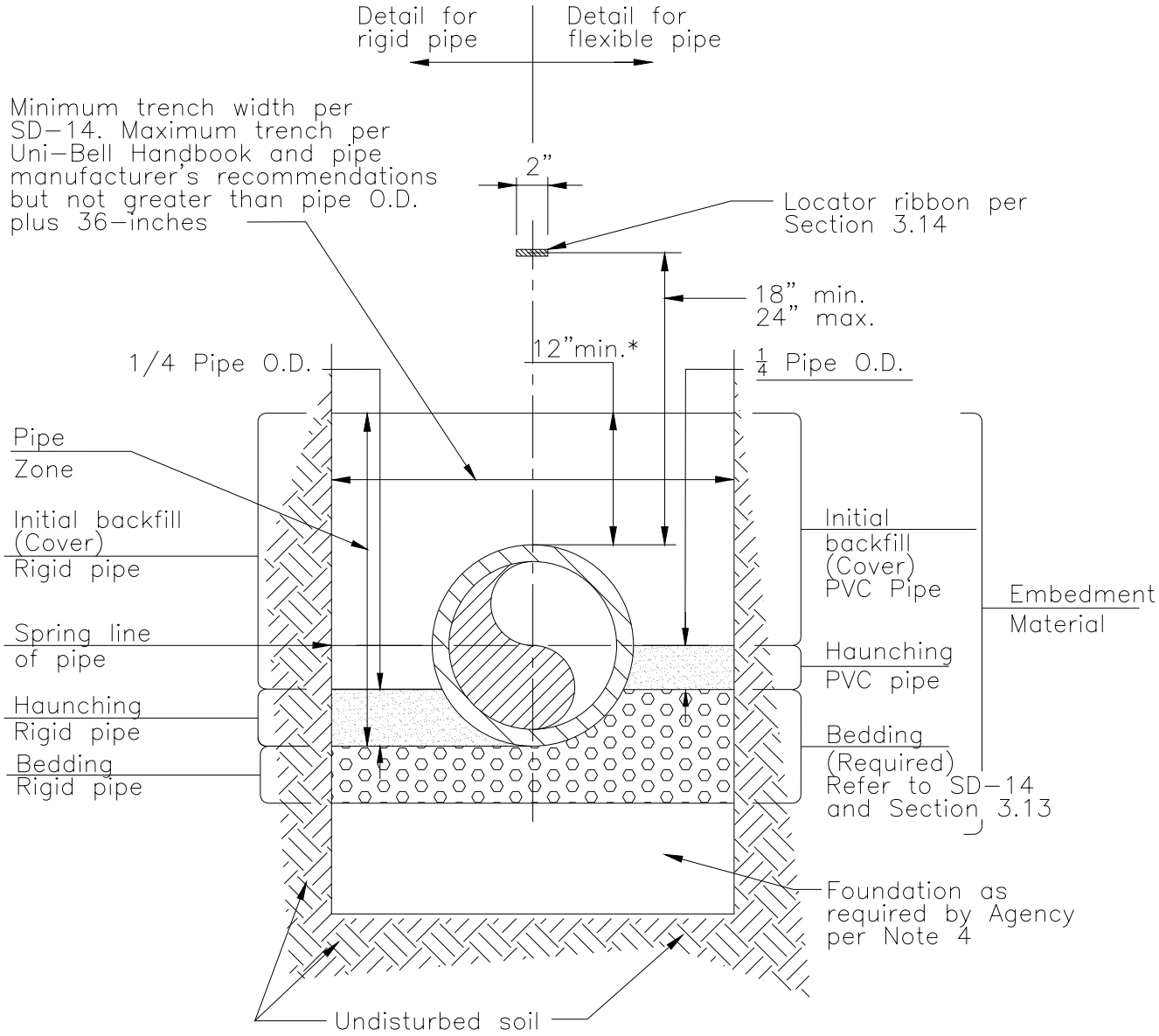

NOTES:

1. See Section 3.13 for other pipe bedding, haunching, cover and backfill requirements.
2. The trench width for flexible pipe shall be as indicated on SD–14 and for rigid pipe, refer to Section 3.13.
3. Bedding, haunching and initial cover for PVC pipe shall conform to the requirements of the Uni–Bell Handbook of PVC pipe, latest edition, and the pipe manufacturer's recommendations.
4. Provide suitable foundation per Section 3.13 and as required by the Agency in areas of unstable trench bottom, wet conditions, over–excavation, rocky trench bottom and elsewhere as directed by the Agency.
5. Trench wall support shall conform to OSHA requirements.

PIPE BEDDING, HAUNCH SUPPORT & INITIAL COVER

ISSUED:	NUMBER: SD-15

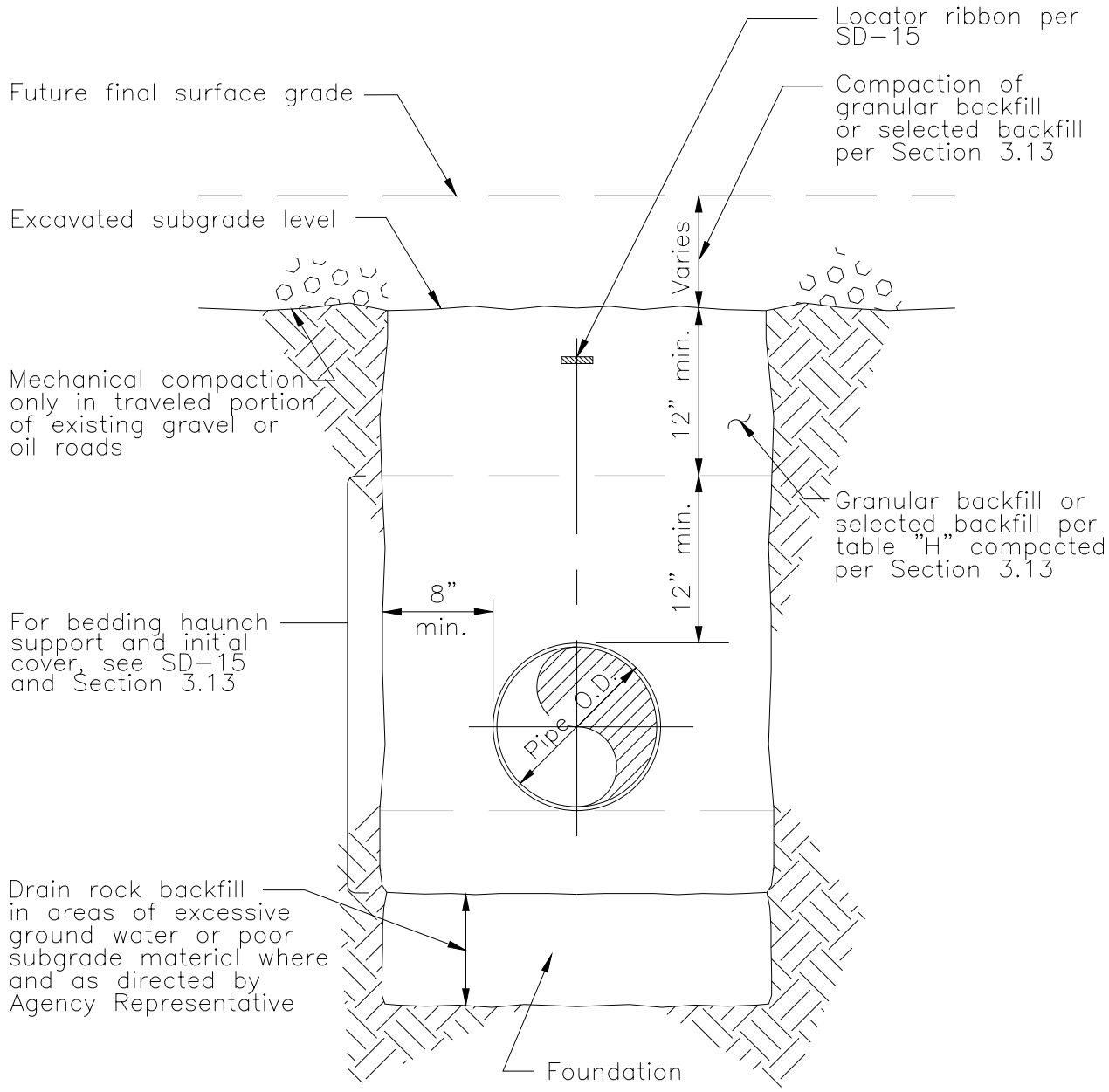

NOTES:

1. Trench wall support shall conform to OSHA requirements.
2. Backfill material within 36-inches of top of pipe shall be compacted using hand-operated compaction equipment only.
3. Backfill greater than 36-inches above top of pipe shall be compacted using heavy crawler-mounted or wheel mounted compaction equipment only.

TRENCH SECTION FOR SEWER MAINS WITHIN SUBDIVISION & UNPAVED AREAS

ISSUED:	NUMBER: SD-16

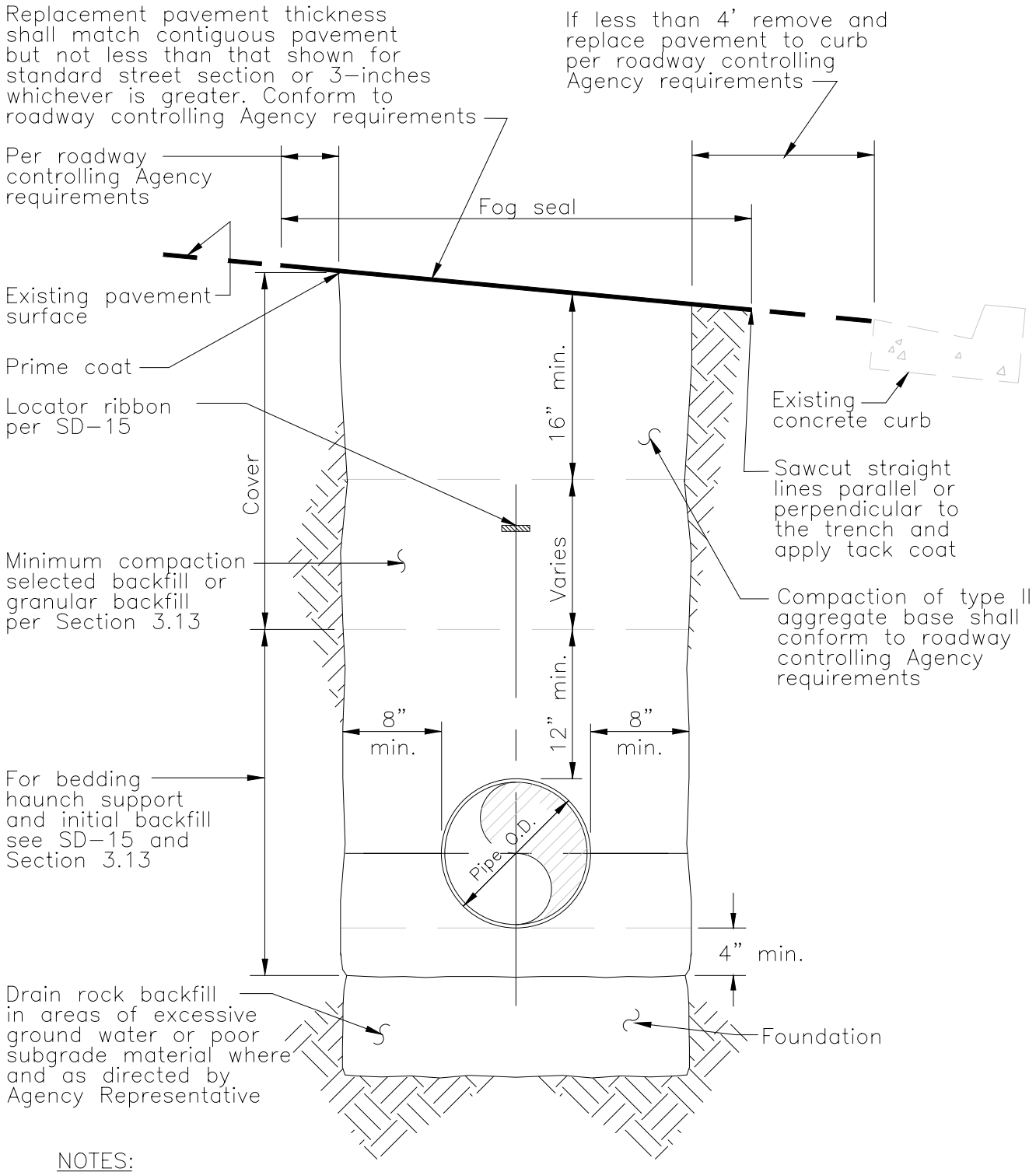

NOTES:

1. Trench wall support shall conform to OSHA requirements.
2. Backfill material within 36-inches of top of pipe shall be compacted using hand-operated compaction equipment only.
3. Backfill greater than 36-inches above top of pipe shall be compacted using heavy crawler-mounted or wheel mounted compaction equipment only.

TYPICAL TRENCH SECTION FOR PAVED AREAS - 60' OR LESS R/W

ISSUED:	NUMBER: SD-17

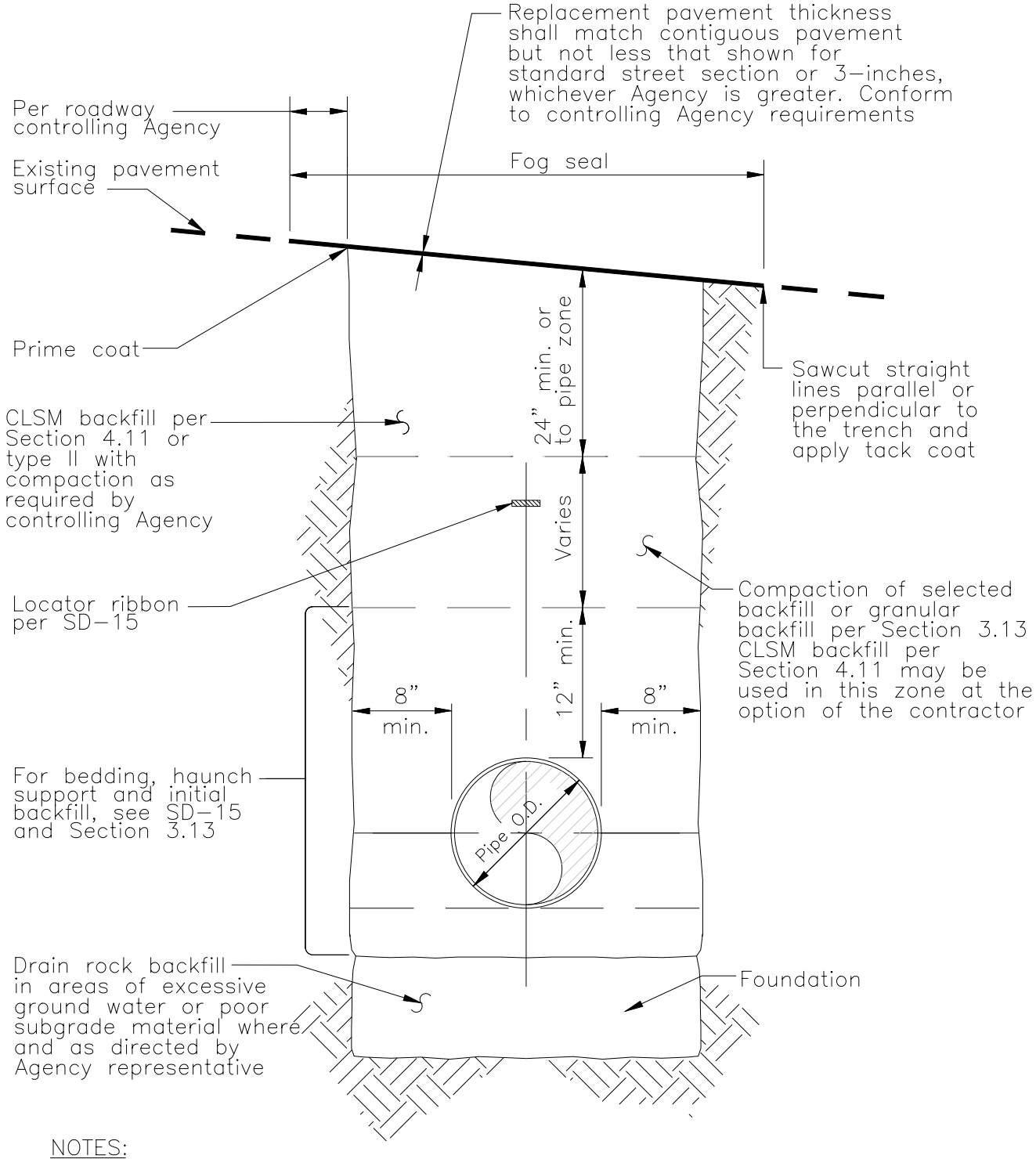

NOTES:

1. Trench wall support shall conform to OSHA requirements.
2. Backfill material within 36-inches of top of pipe shall be compacted using hand-operated compaction equipment only.
3. Backfill greater than 36-inches above top of pipe shall be compacted using heavy crawler-mounted or wheel mounted compaction equipment only.

TYPICAL TRENCH SECTION BACKFILL FOR PAVED AREAS - GREATER THAN 60' R/W

ISSUED:	NUMBER: SD-18

TYPICAL UNDERGROUND UTILITY LOCATIONS IN STREET
(CONFORM TO RTC STANDARD 501, LATEST EDITION)

ISSUED:

NUMBER: **SD-19**

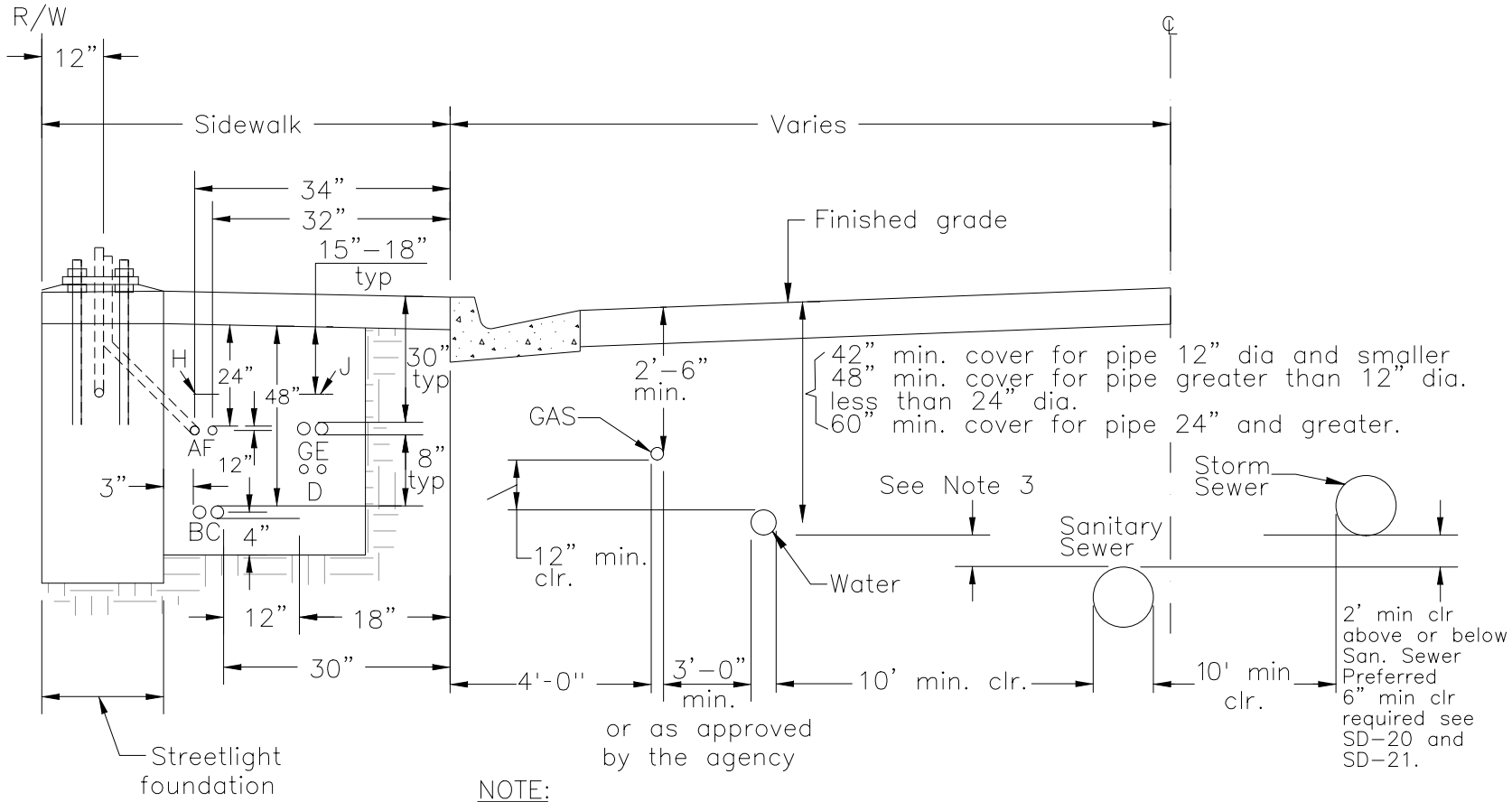

A. Street light conduit
B. Power company secondary
C. Power company primary
D. Telephone conduits
E. Cable T.V. conduit
F. Traffic signal conduit
G. Other communication conduit
H. Power marking tape
J. Telephone marking tape

NOTE:

1. Sewer may be located on the other side of centerline as terrain dictates.
2. Streetlight foundations shall be located behind sidewalk for sidewalk widths less than 5 feet per RTC standard drawing No. 320.
3. Separation distance shall conform to utility standards adopted by the governing agency for sewer and water facilities
4. Street construction shall conform to the approved construction documents.
5. Utility construction backfill shall conform to RTC Specification Section 208, except as indicated in Section 3.13 for Sanitary Sewers.
6. Utility lines shall be re–routed if drop inlet is in conflict.
7. Water transmission main separation shall conform to water purveyor guidlines

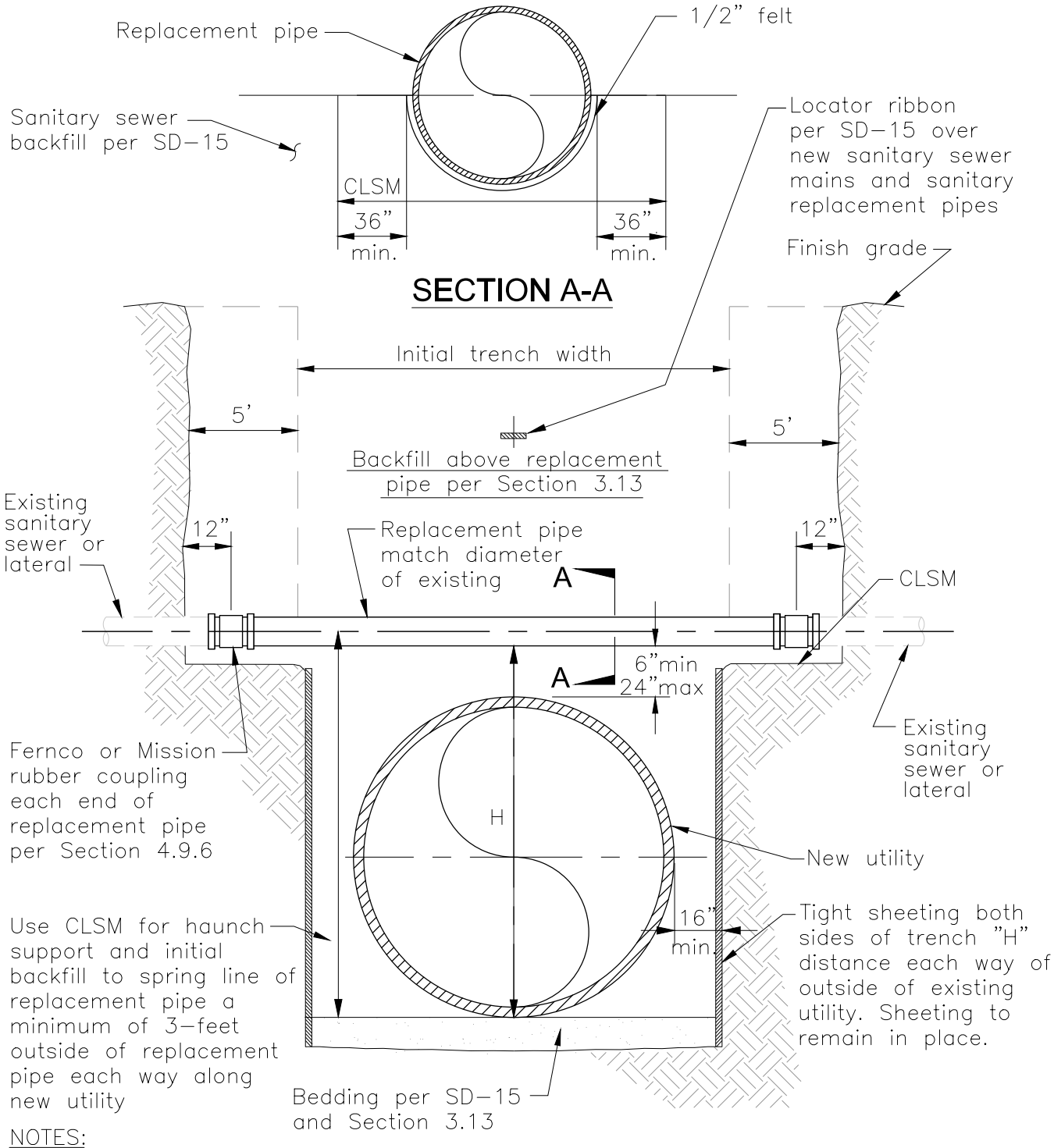

NOTES:

1. Replace all existing sanitary sewers and laterals with C-900 or C-905 PVC as applicable. Replace storm sewers per Section 2.2.22.
2. Not for water mains or water services. See UDACS for replacement requirements.
3. Upper and lower trench wall support shall conform to OSHA requirements.
4. Use this detail where the vertical clearance from outside of new utility to outside of sewer/lateral is less than 24 inches.

REPLACEMENT OF EXISTING SANITARY SEWER OR LATERAL OVER NEW UTILITY

ISSUED:	NUMBER: SD-20

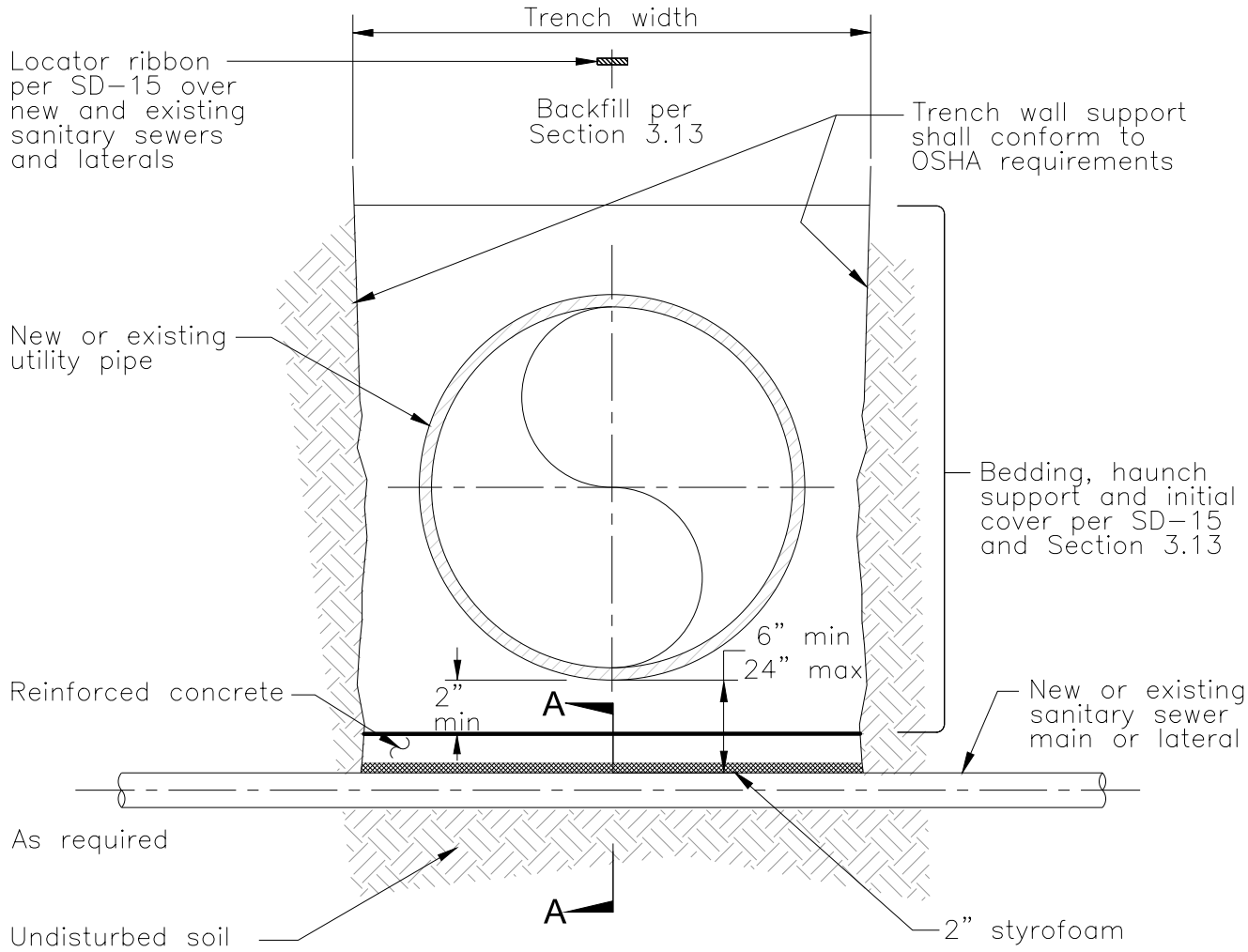

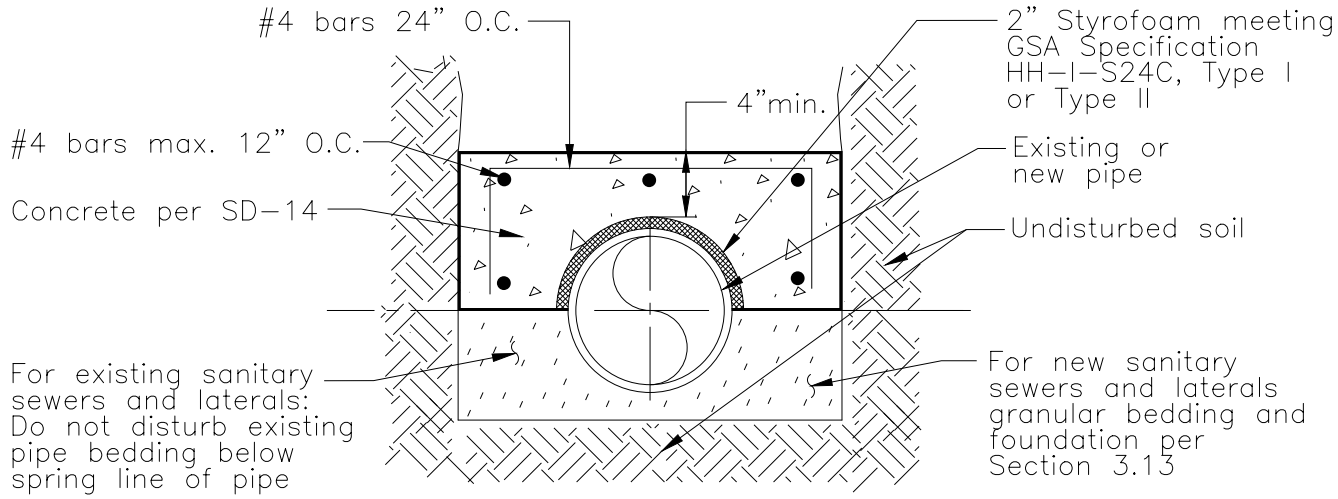

SECTION A-A

NOTE:
Use this detail where the vertical clearance from outside of utility pipe to outside of sewer/lateral is less than 24 inches.

PROTECTION OF SANITARY SEWER UNDER A UTILITY

ISSUED:	NUMBER: SD-21

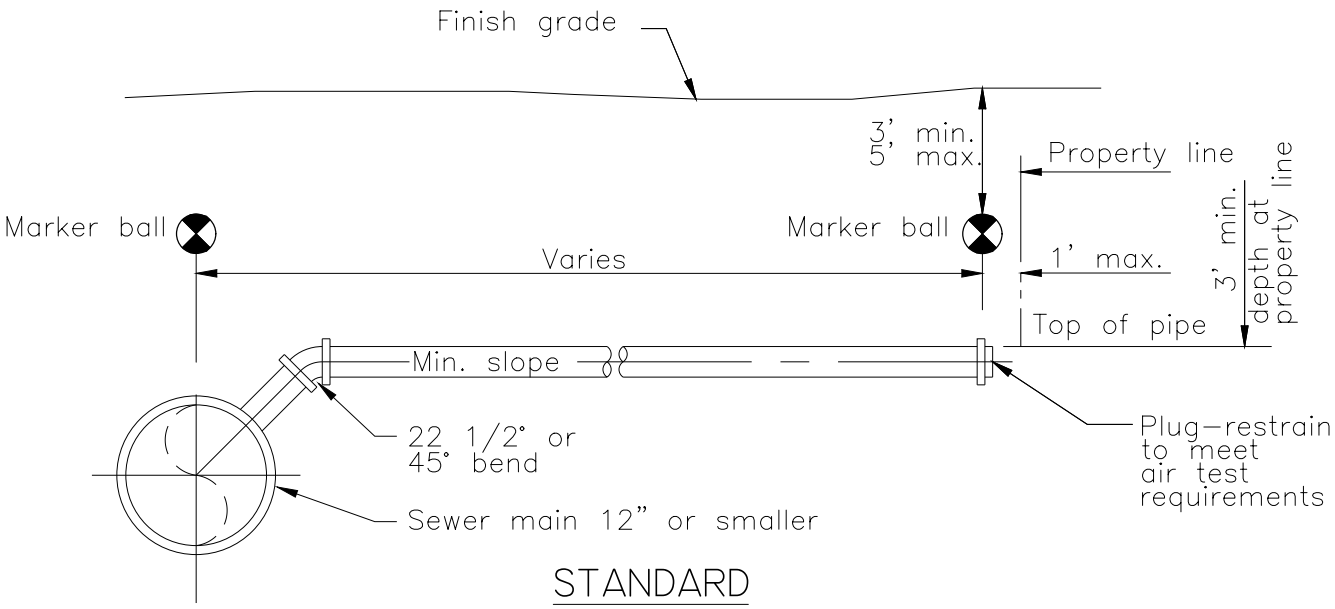

STANDARD
LATERAL CONNECTION

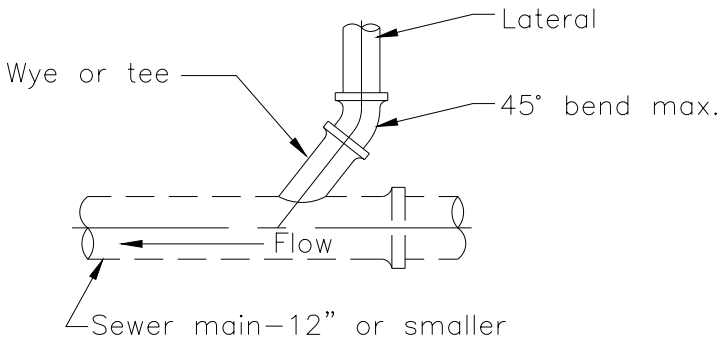

STANDARD WYE
PLAN VIEW

NOTES:

1. All construction shall conform to Section 3.17.
2. All concrete shall be 3000# minimum in accordance with Section 4.11.
3. 22 1/2° or 45° bend may be rotated at sewer main only.
4. Lateral connections shown are limited to main line sanitary sewers 12-inches in diameter or smaller unless otherwise directed by Agency.
5. Place locator ribbon per SD-15 above lateral along its full length.
6. Place marker ball per Section 3.14 and Section 4.12.3 over lateral at connection to main and at upstream end of lateral at property line. Marker ball shall be 3' min. below finish grade where possible.

LATERAL CONNECTION TO SEWER MAIN 12" DIA AND SMALLER

ISSUED:	NUMBER: SD-22

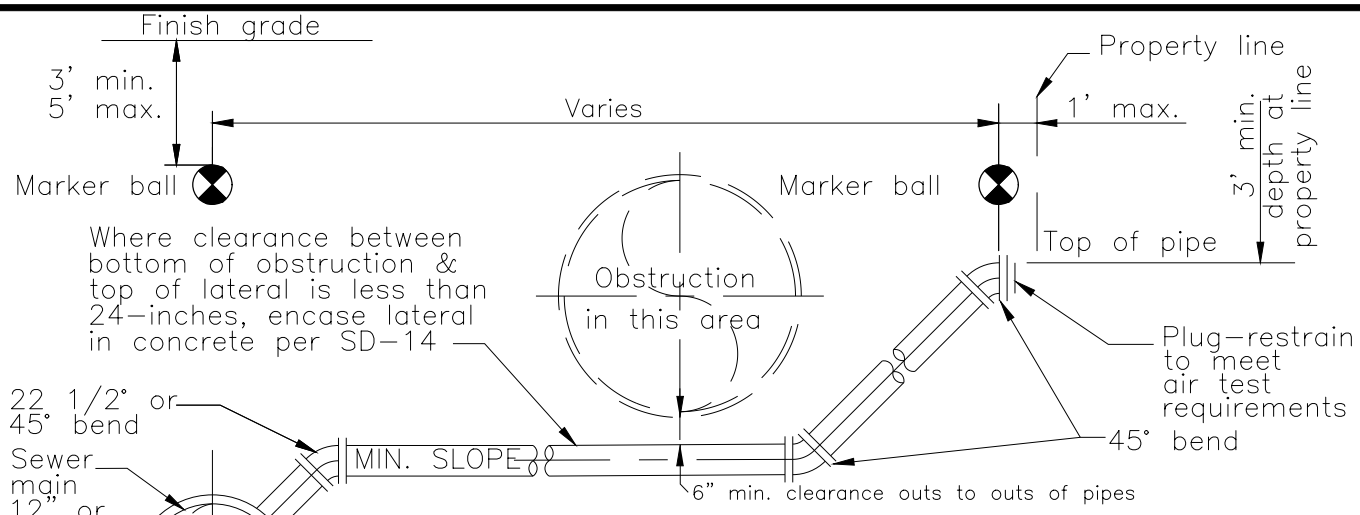

LATERAL CONNECTION UNDER OBSTRUCTION

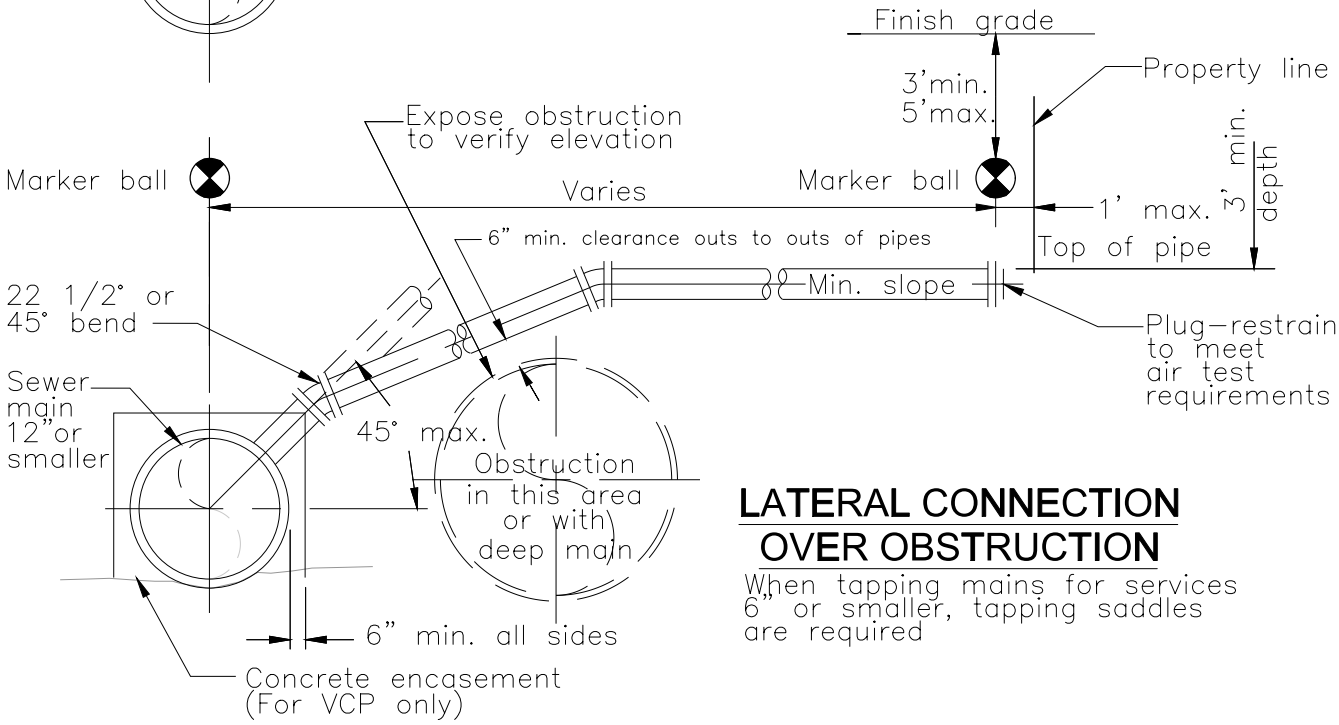

LATERAL CONNECTION OVER OBSTRUCTION

When tapping mains for services 6" or smaller, tapping saddles are required

NOTES:

1. All construction shall conform to Section 3.17.
2. All concrete shall be 3000# minimum in accordance with Section 4.11.
3. 22 1/2° or 45° bend may be rotated at sewer main only.
4. Lateral connections shown are limited to main line sanitary sewers 12-inches in diameter or smaller unless otherwise directed by Agency.
5. Place locator ribbon per SD-15 above lateral; along its full length.
6. Place marker ball per Section 3.14 and Section 4.12.3 over lateral at connection to main and at upstream end of lateral at property line. Marker ball shall be 3' min. below finish grade where possible.

LATERAL CONNECTIONS TO SEWER MAINS 12" DIA AND SMALLER AROUND OBSTRUCTIONS

ISSUED:	NUMBER: SD-23

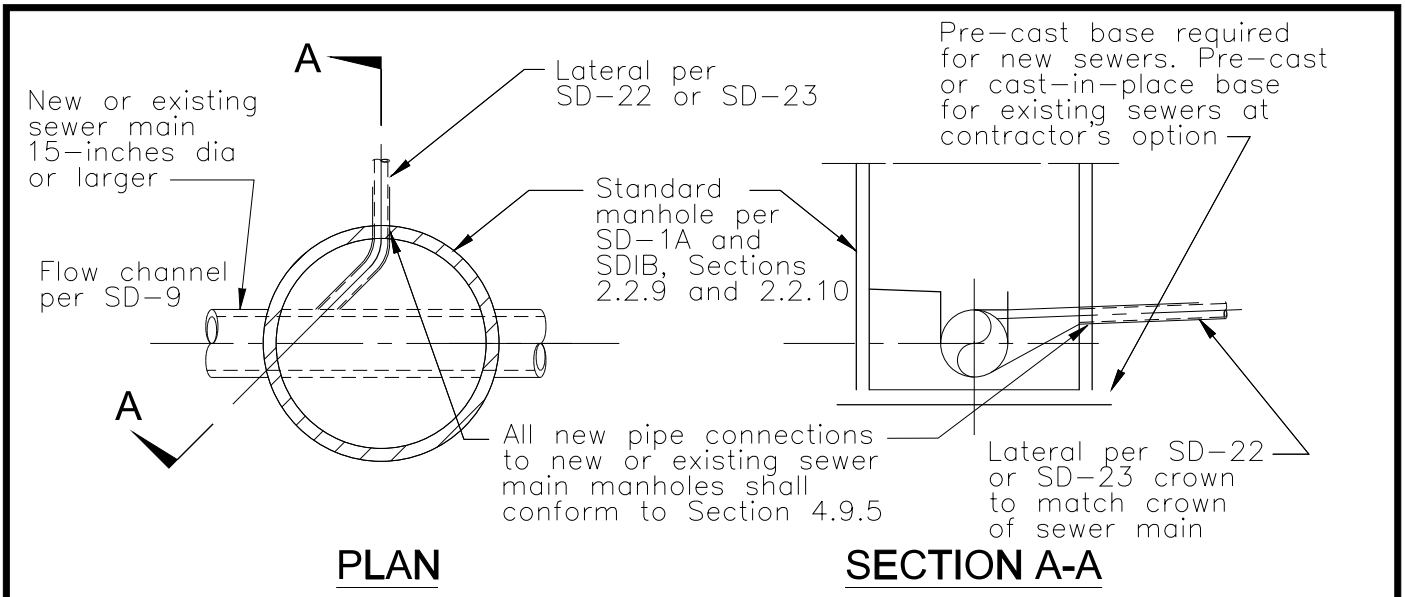

PLAN

SECTION A-A

LATERAL CONNECTIONS USING INDIVIDUAL MANHOLES

Permitted at contractor's option where 3 or fewer laterals are to be connected per 500 feet of sewer main unless otherwise required by Agency

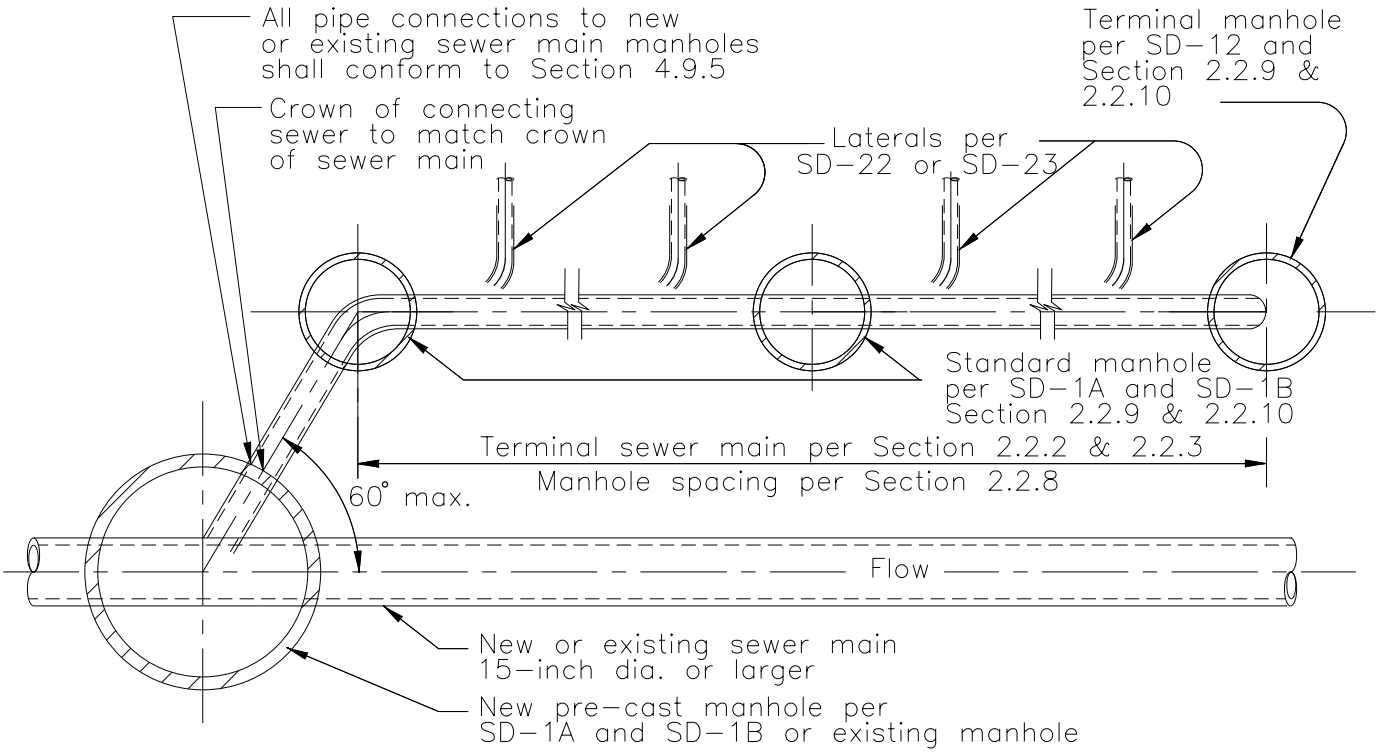

LATERAL CONNECTIONS USING PARALLEL SEWER

Required where 4 or more laterals are to be connected per 500 ft of sewer main unless otherwise permitted by Agency

LATERAL CONNECTIONS TO SEWER MAINS 15" AND LARGER

ISSUED:	NUMBER: SD-24

NOTES:

1. By contractor
   A. Provide post and place as indicated.
   B. Paint number of inches from top post to lateral invert.
2. By Agency forces
   A. Provide tag and affix sewer lateral tag to post as indicated.
   B. Stamp number of inches on tag.

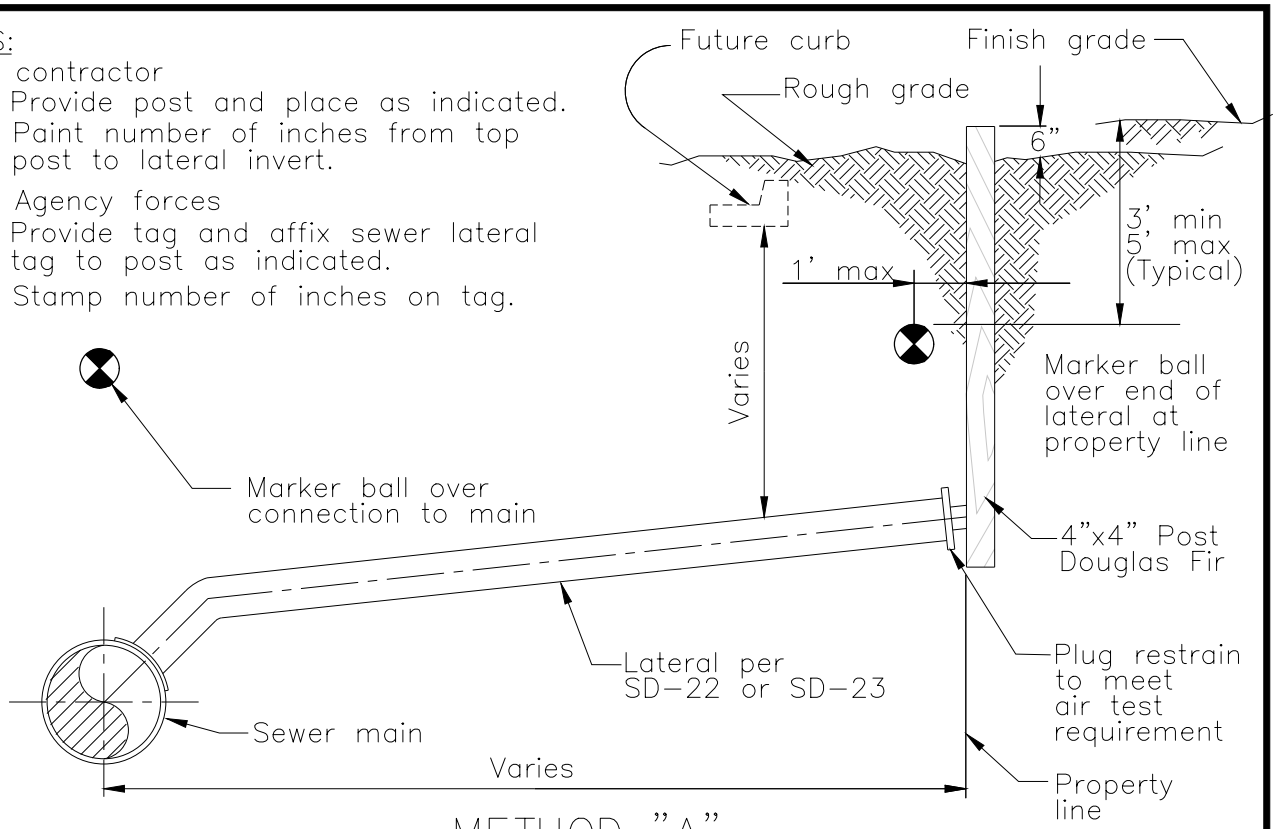

METHOD "A"

Use where no curb & gutter exist

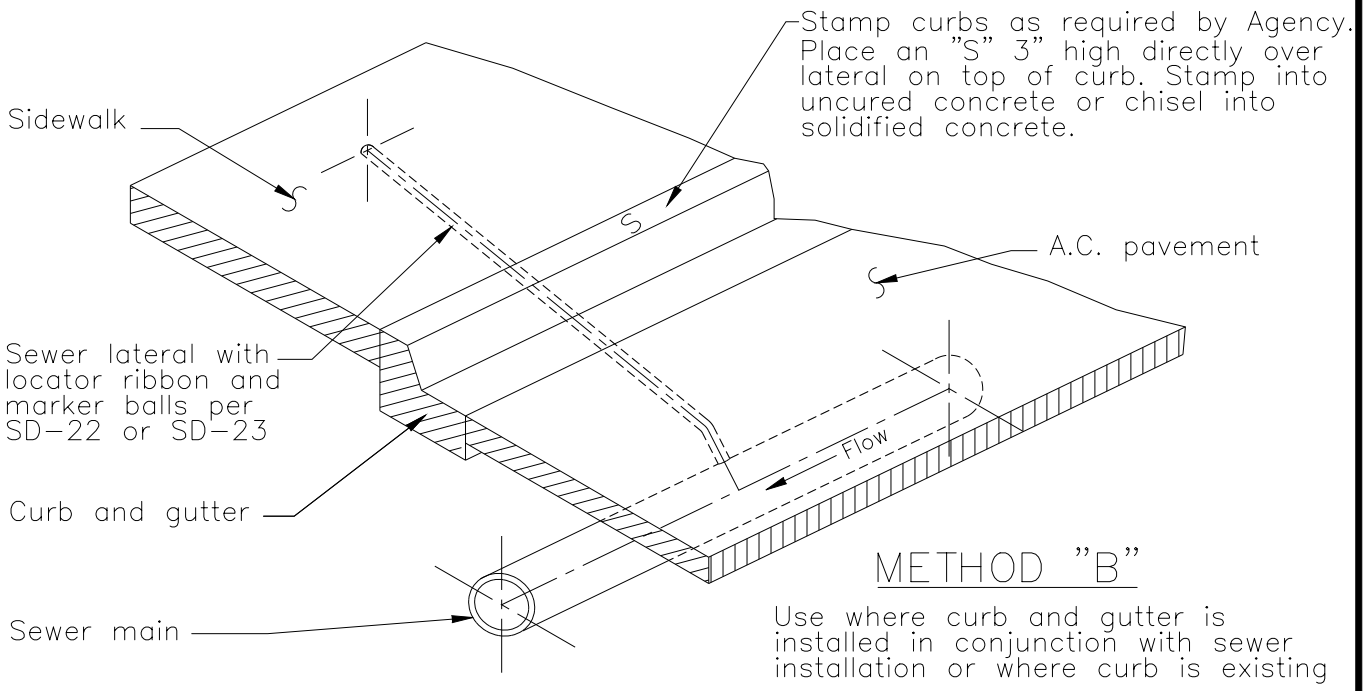

METHOD "B"

Use where curb and gutter is installed in conjunction with sewer installation or where curb is existing

NOTES:

3. When required by Agency, provide cleanout at property line per SD-26.
4. Locator ribbon per Section 4.12.1 and SD-15 and marker balls per Sections 3.14 and SD-22 shall be placed above all new sanitary sewer mains and laterals for both marker method "A" and "B". Marker ball shall be 3' min. below finish grade where possible.

SEWER LATERAL MARKER

ISSUED:	NUMBER: SD-25

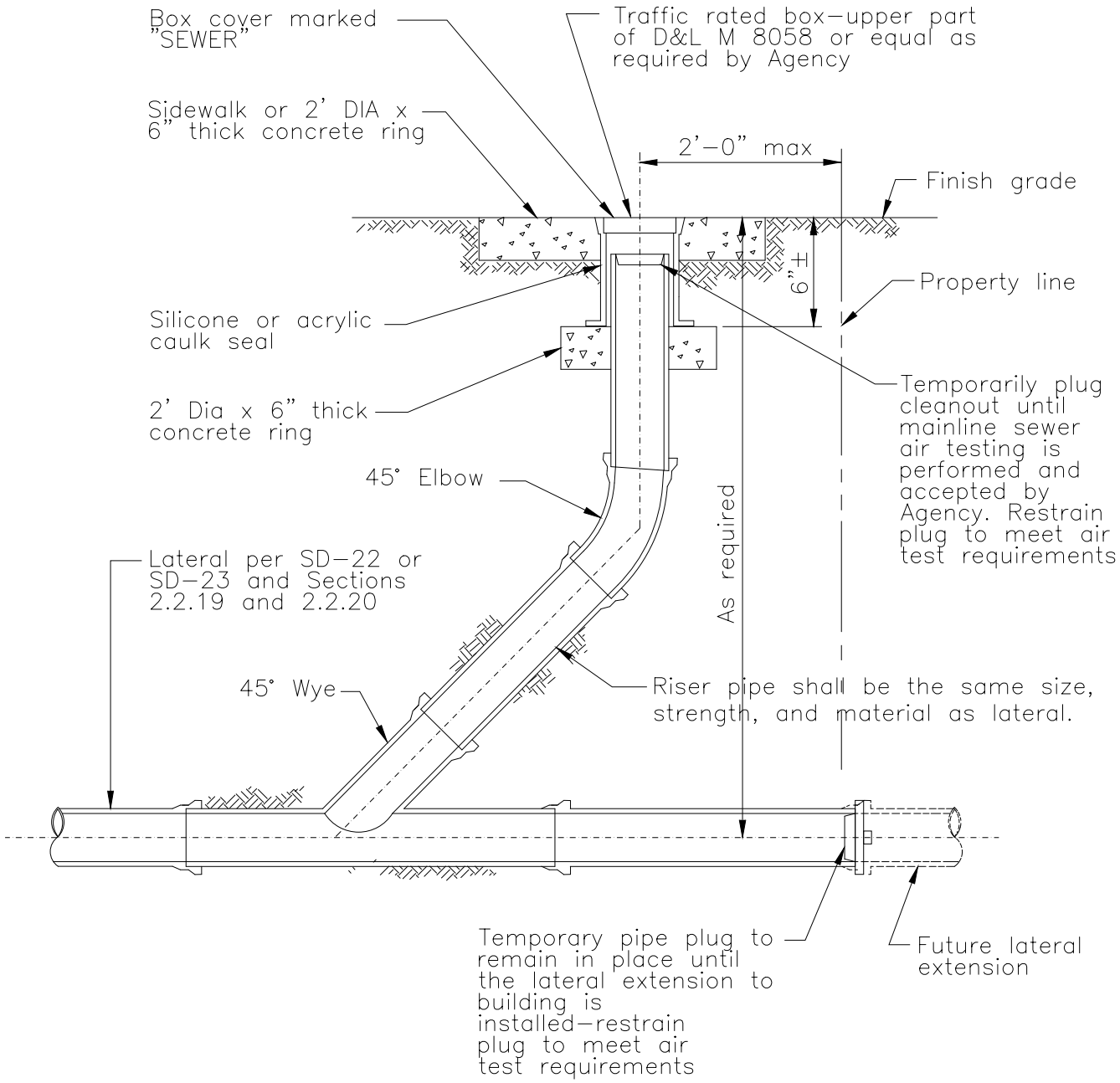

NOTES:

1. Provide cleanouts for laterals where directed by Agency.
2. Marker ball at upstream end of lateral may be deleted for laterals with cleanouts.

LATERAL CLEANOUT

ISSUED:	NUMBER: SD-26

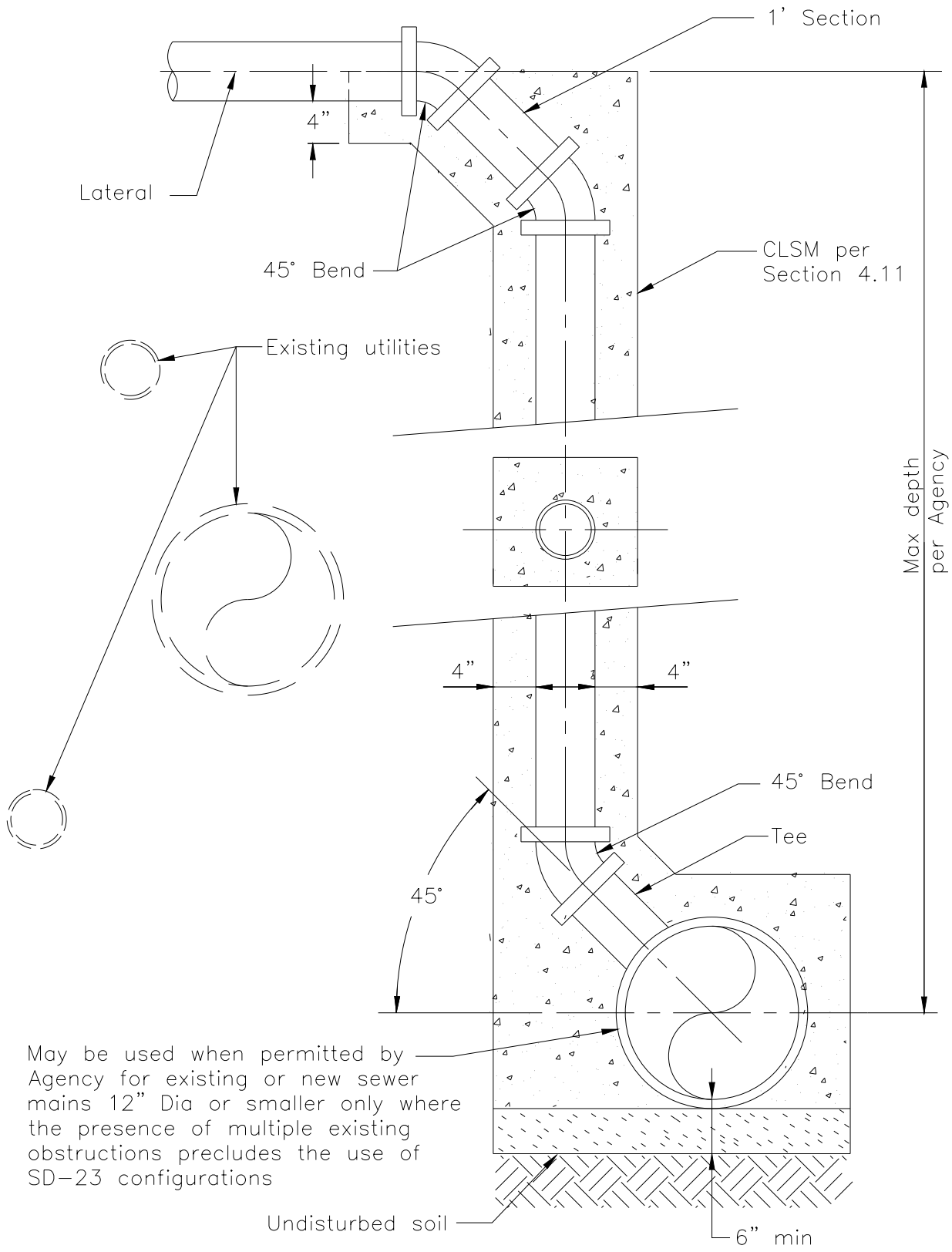

MAY BE USED UPON SPECIAL AGENCY APPROVAL ONLY

DEEP LATERAL CONNECTION

ISSUED:	NUMBER: SD-27

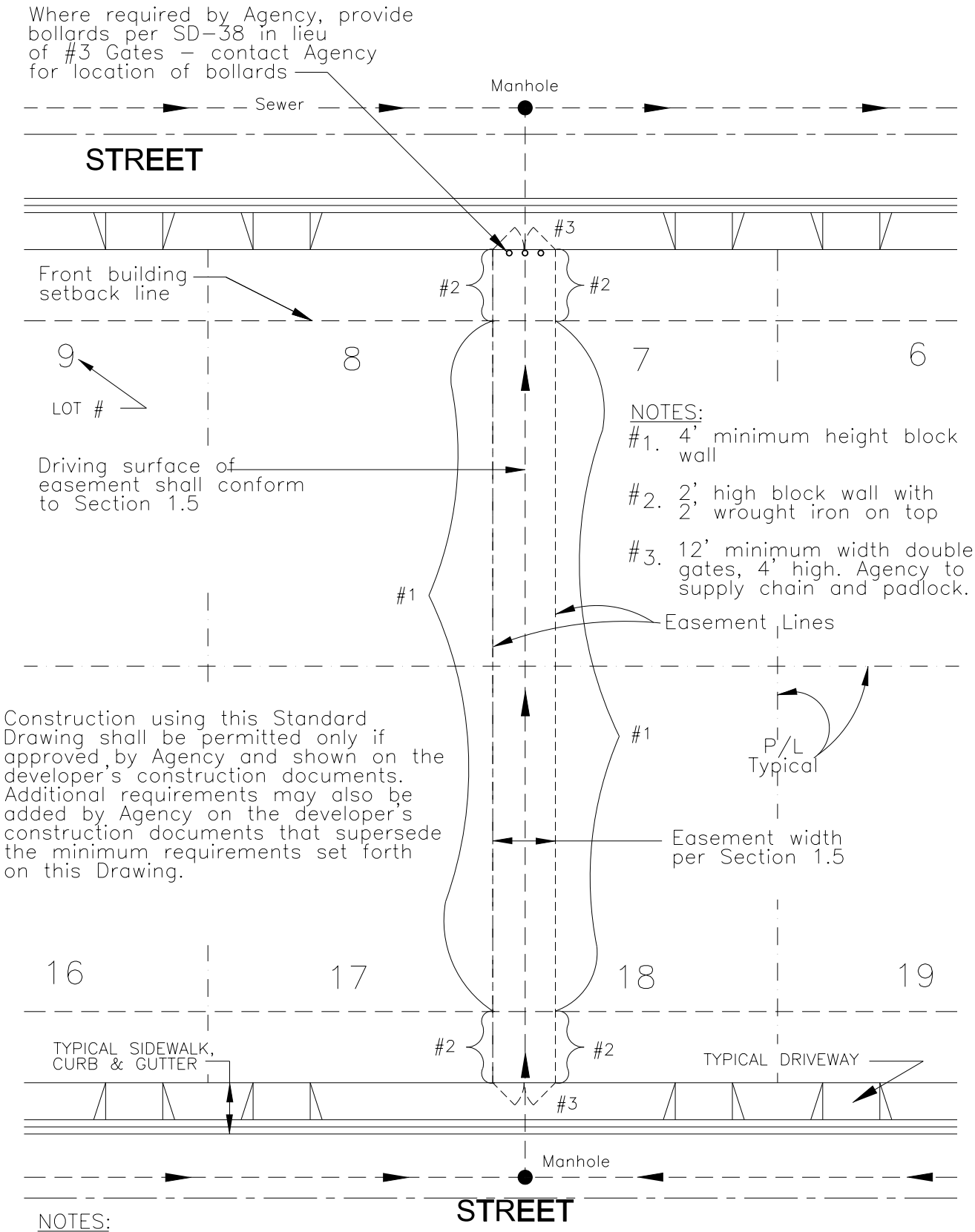

NOTES:

1. Requirements may vary with each Agency.
2. Minimum of 20-ft. vertical clearance in entire easement area.

TYPICAL SEWER EASEMENT REQUIRING BLOCK WALLS

ISSUED:	NUMBER: SD-28A

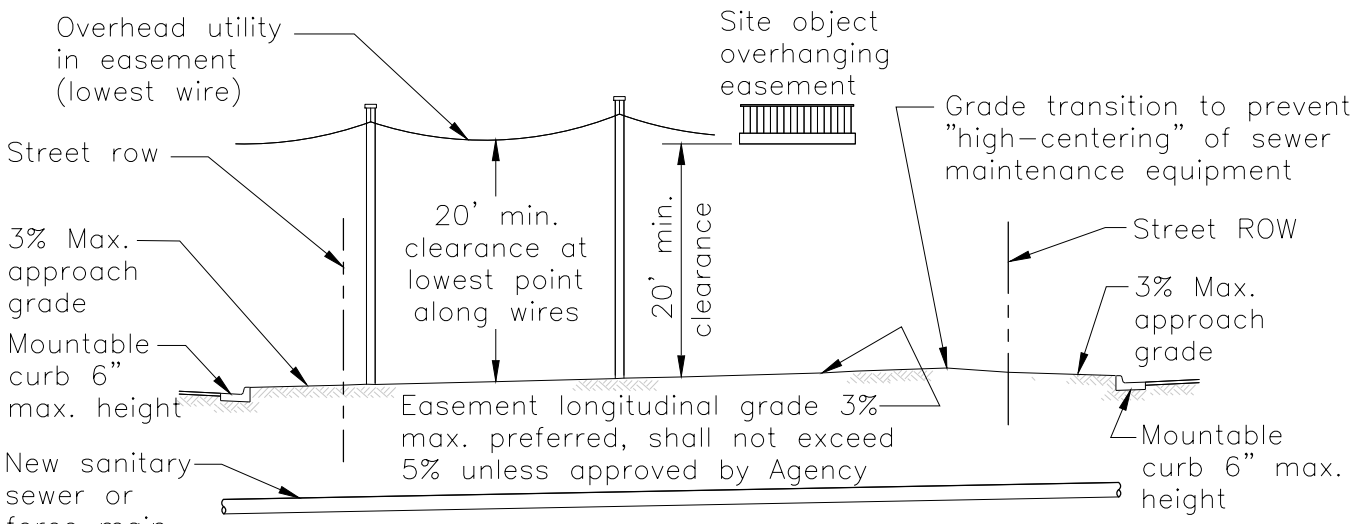

SEWER EASEMENT LONGITUDINAL CROSS-SECTION

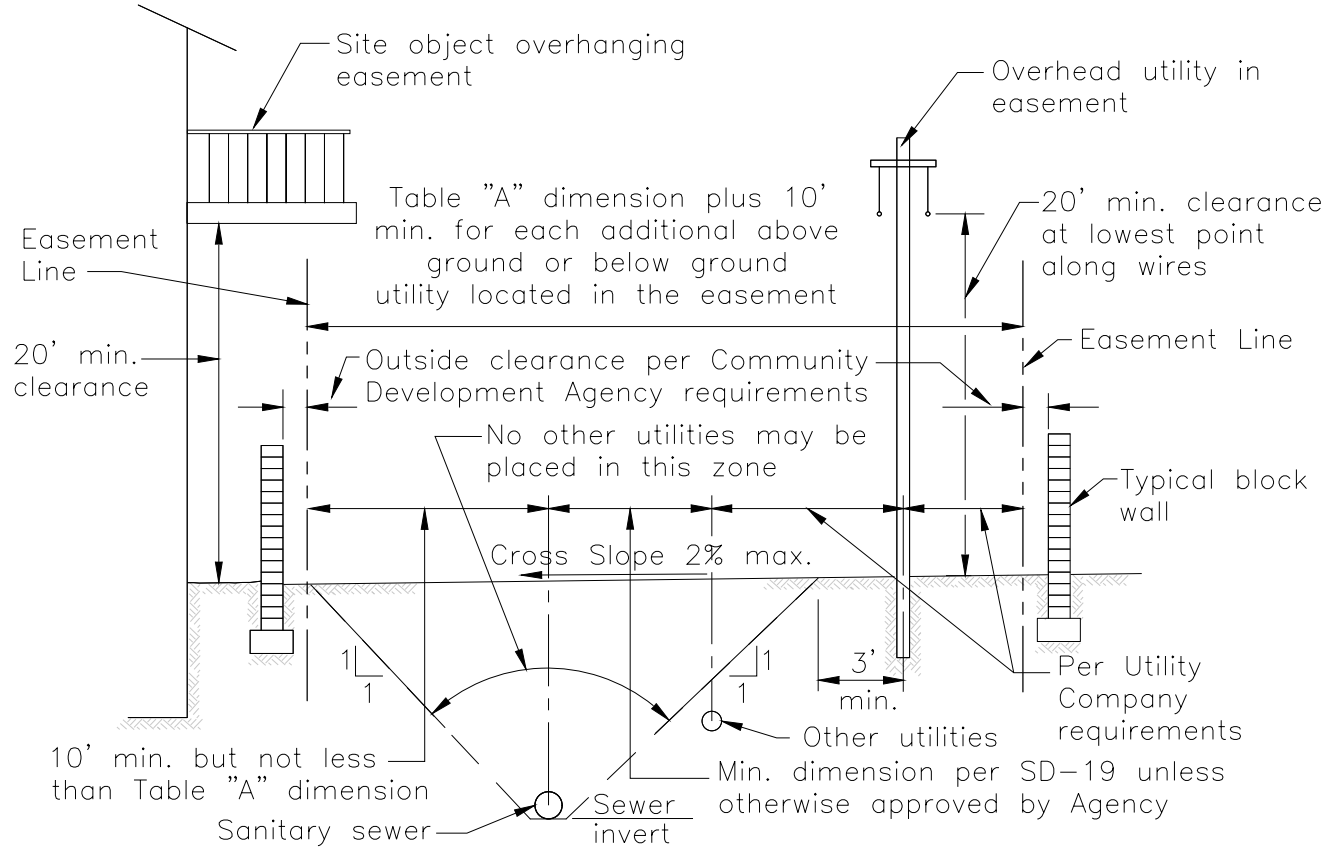

SEWER EASEMENT TRANSVERSE CROSS-SECTION

NOTES:

1. Easement widths and clearances between individual utilities and between utilities and site objects shall be increased as necessary to prevent undermining of site objects and/or other utilities during sanitary sewer construction.
2. No landscaping having a mature height greater than 3' shall be placed in easement.

TYPICAL SEWER EASEMENTS REQUIRING BLOCK WALLS

ISSUED:	NUMBER: SD-28B

To satisfy the intent of the Uniform Plumbing code, latest edition for residential backwater valves:

"Drainage piping serving fixtures which have flood level rims located below the elevation of the next upstream manhole cover of the public or private sewer serving such drainage piping shall be protected from backflow of sewage by installing an approved type backwater valve. All fixtures located within the dwelling unit may discharge through a single backwater valve, provided that approved type cleanouts are located immediately upstream and downstream of the backwater valve. Backwater valves shall be located where they will be accessible for inspection and repair at all times. The access sleeve shall not extend more than 24" from the top of the valve cover to the top of the sleeve cap. All backwater valves located 24" or less will not require an access box. The backwater valve may be installed a maximum of 36" below grade provided an access box with minimum dimensions of 14" in width by 23" in length measured from inside edge to inside edge is used and the minimum depth of the box is 12". All backwater valves located deeper than 36" shall be made accessible by use of a yard box or vault sized large enough to permit a person to enter the box for the purpose of accessing the backwater valve."

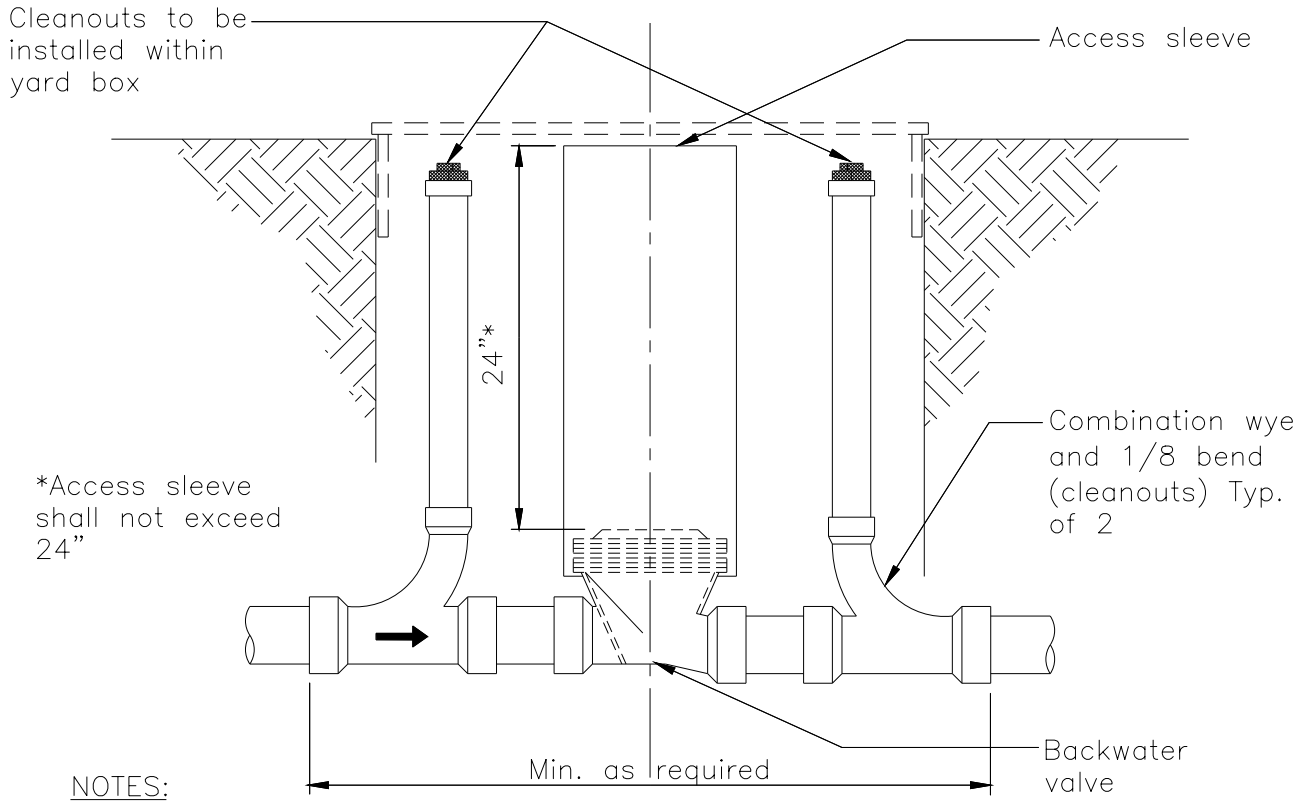

NOTES:

1. 36" Max. depth with box – min. dimension 14"x23"x12" in depth.
2. Valve located deeper than 36" shall be sized to permit a person to enter the box.
3. Remove valve assembly to clean out behind clapper.
4. To be installed by onsite plumbing contractor.

RESIDENTIAL SEWER BACKWATER VALVE

ISSUED:	NUMBER: SD-29

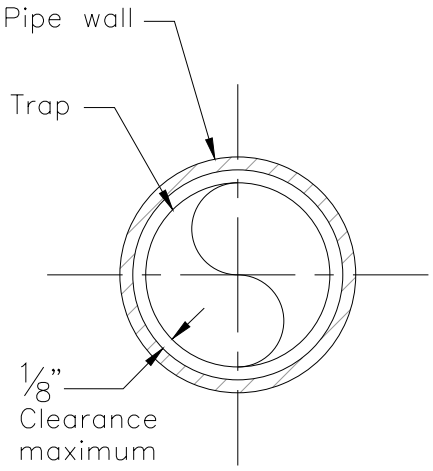

CROSS SECTION OF DISCARD PIPE WITH TRAP INSTALLED

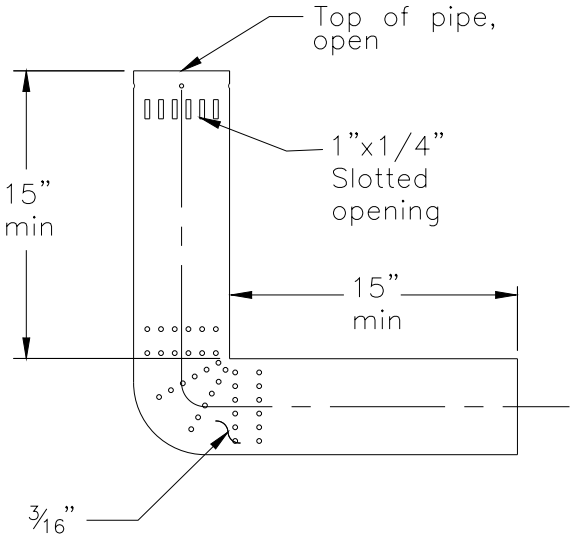

CUSTOM FABRICATED METAL TRAP

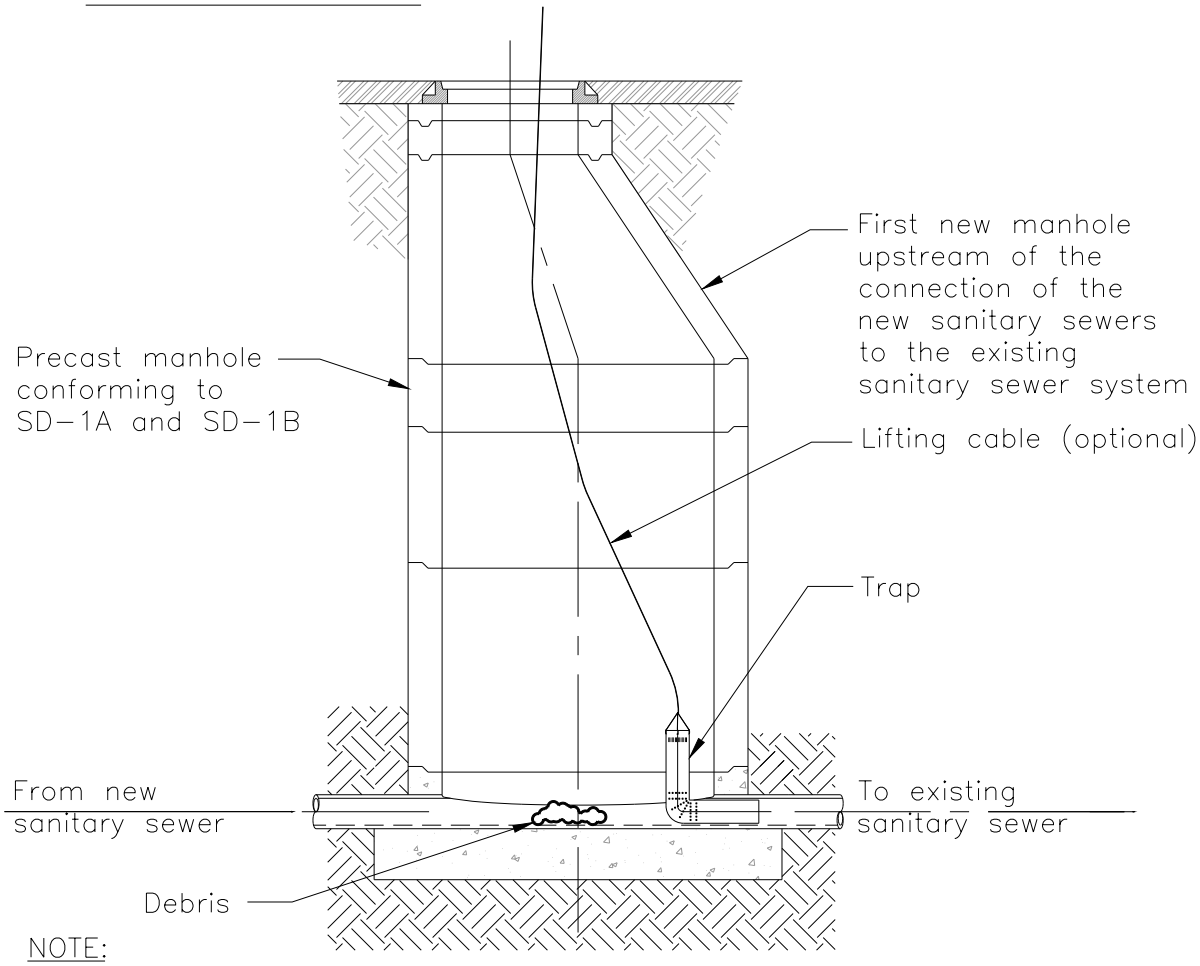

NOTE:

1. Provide debris traps in accordance with Section 3.16.9.

APPROVED TRAP FOR SEWER LINE CONSTRUCTION

ISSUED:	NUMBER: SD-30

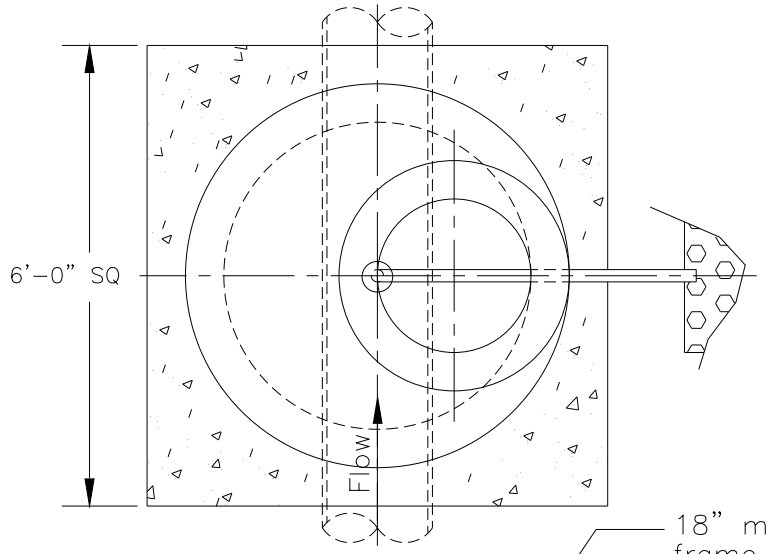

PLAN

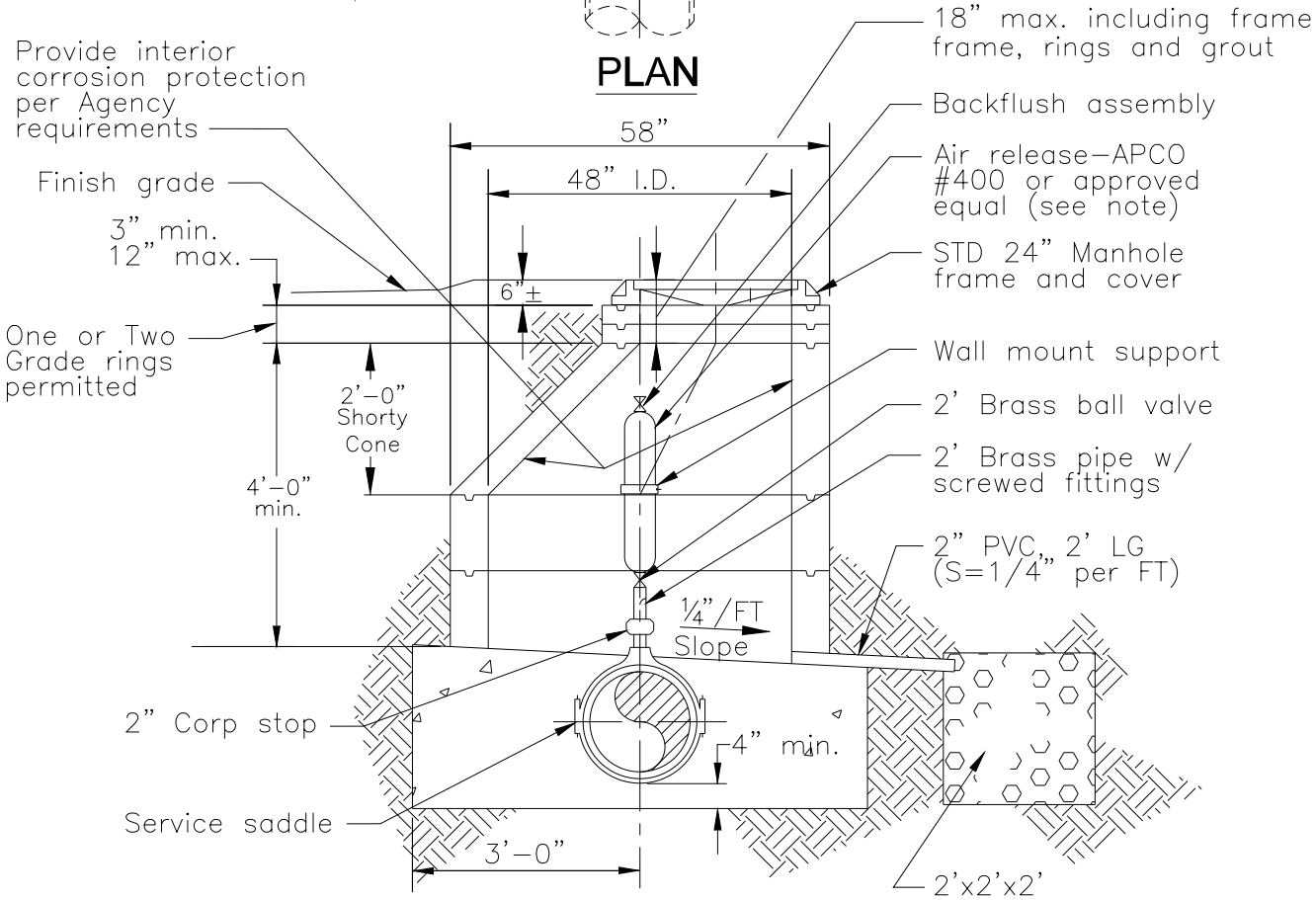

ELEVATION

NOTES:

1. Engineer shall calculate and size necessary valves independently for each high point and long (>1/4 mile) ascending/descending stretches in a wastewater force main.

2. Valves and appurtenances shall be submitted for Agency approval; and, shall be suitable for wastewater use whether air release valve, air and vacuum valve or combination air valve. Backflush assembly for the valves shall be required.

3. Each Agency shall have the right to determine if it shall allow high points (peaks) in a wastewater force main in its system.

BELOW GRADE AIR RELIEF VALVES

ISSUED:	NUMBER: SD-31

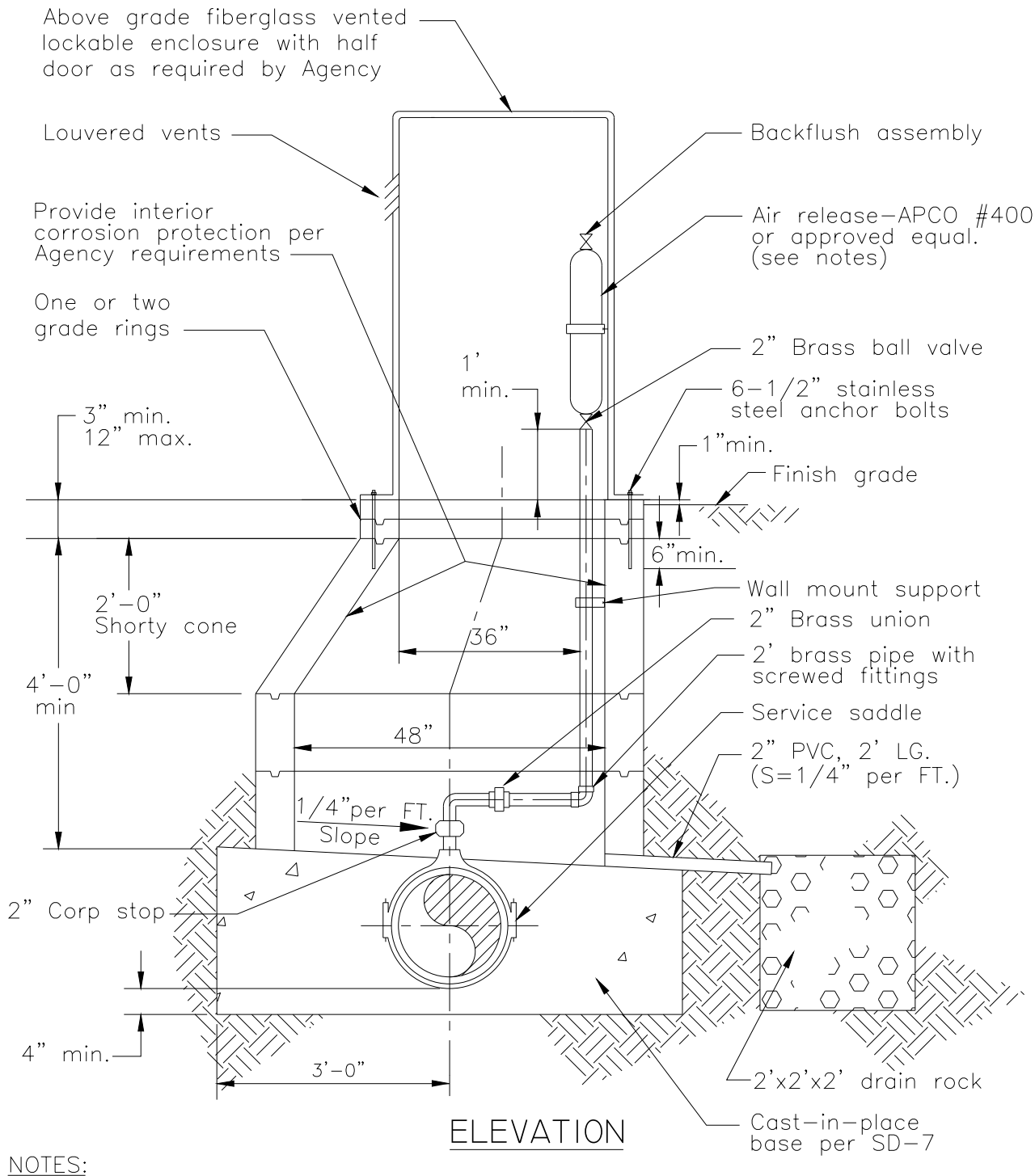

ELEVATION

NOTES:

1. Engineer shall calculate and size necessary valves independently for each high point and long (> ¼ mile) ascending/ descending stretches in a wastewater force main.
2. Valves and appurtenances shall be submitted for Agency approval; and, shall be suitable for wastewater use, whether air release valve, air and vacuum valve or combination air valve. Backflush assembly for the valves shall be required.
3. Each Agency shall have the right to determine if it shall allow high points (peaks) in a wastewater force main in its system.

ABOVE GRADE AIR RELIEF VALVES

ISSUED:	NUMBER: SD-32

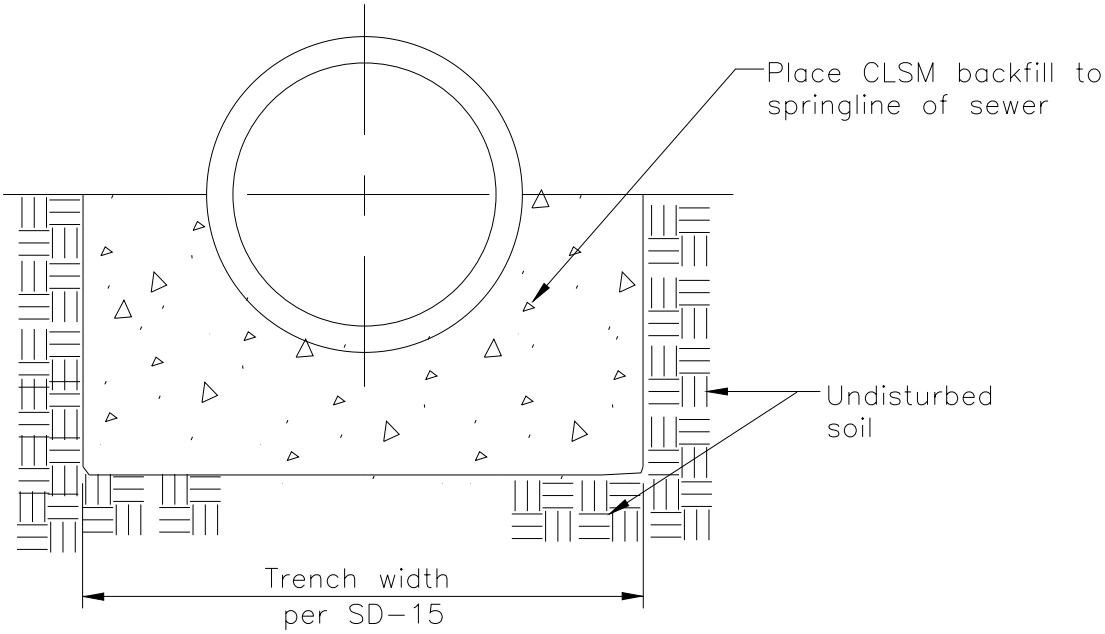

SECTION

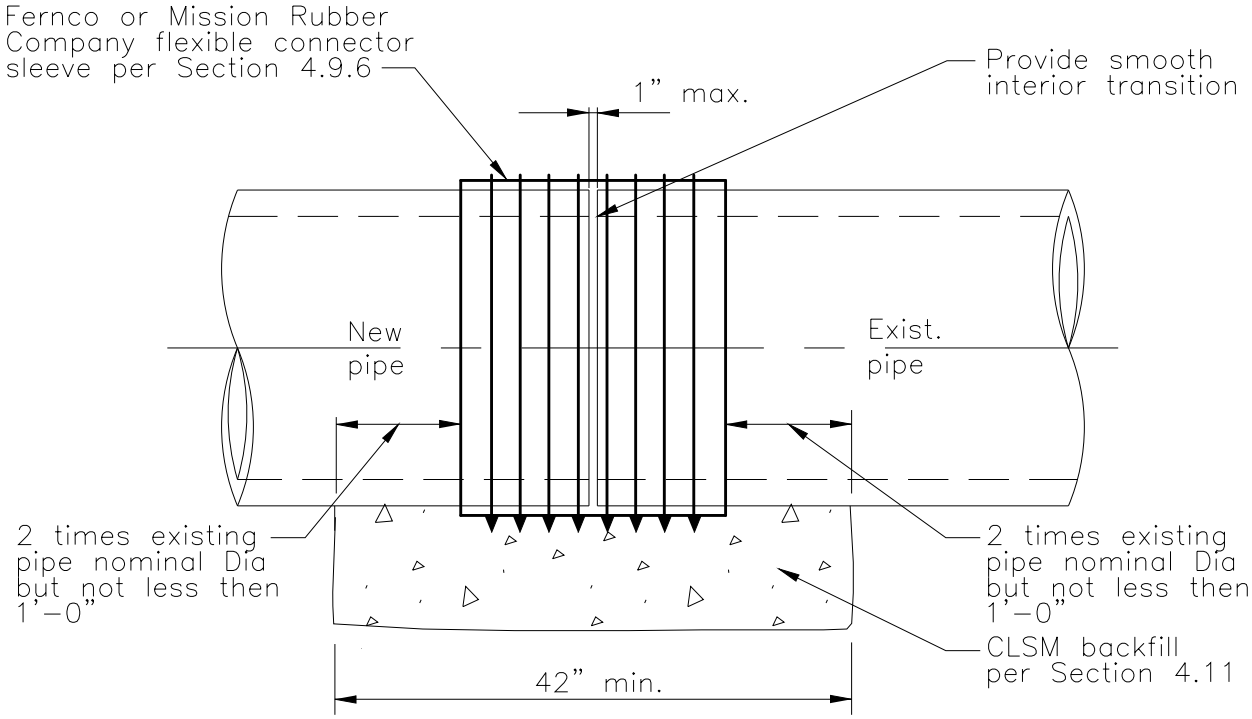

ELEVATION

RIGID PIPE FIELD CLOSURE

ISSUED:	NUMBER: SD-33

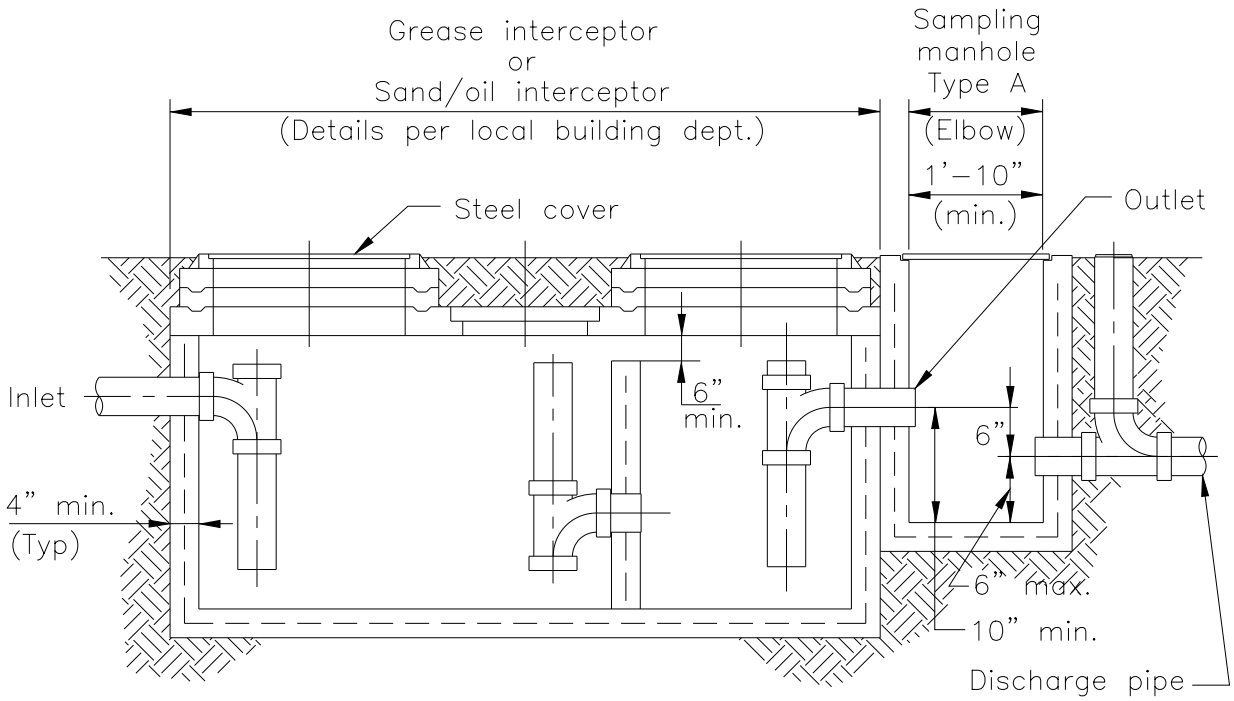

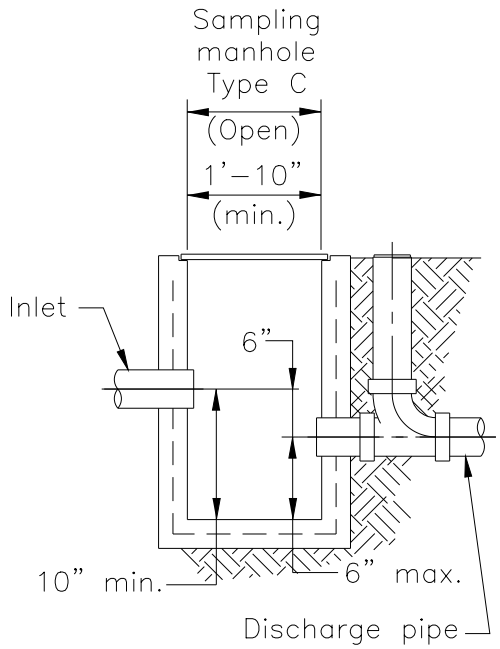

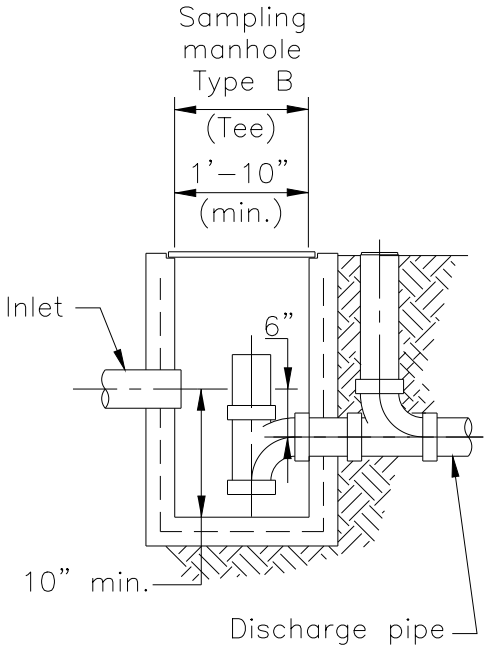

NOTES:

1. Provide 6" free fall from centerline of outlet to centerline of discharge pipe.
2. Check with each governing Agency for allowable use of type A, B or C sampling manhole within their jurisdiction.
3. Type A, B or C manholes require a minimum of 10" at the bottom of the manhole for immersion of lab sampling bottle. Type B manholes require 6" minimum tees since the sample bottle is lowered within the tee.

PRETREATMENT SAMPLING MANHOLE

ISSUED:	NUMBER: SD-34

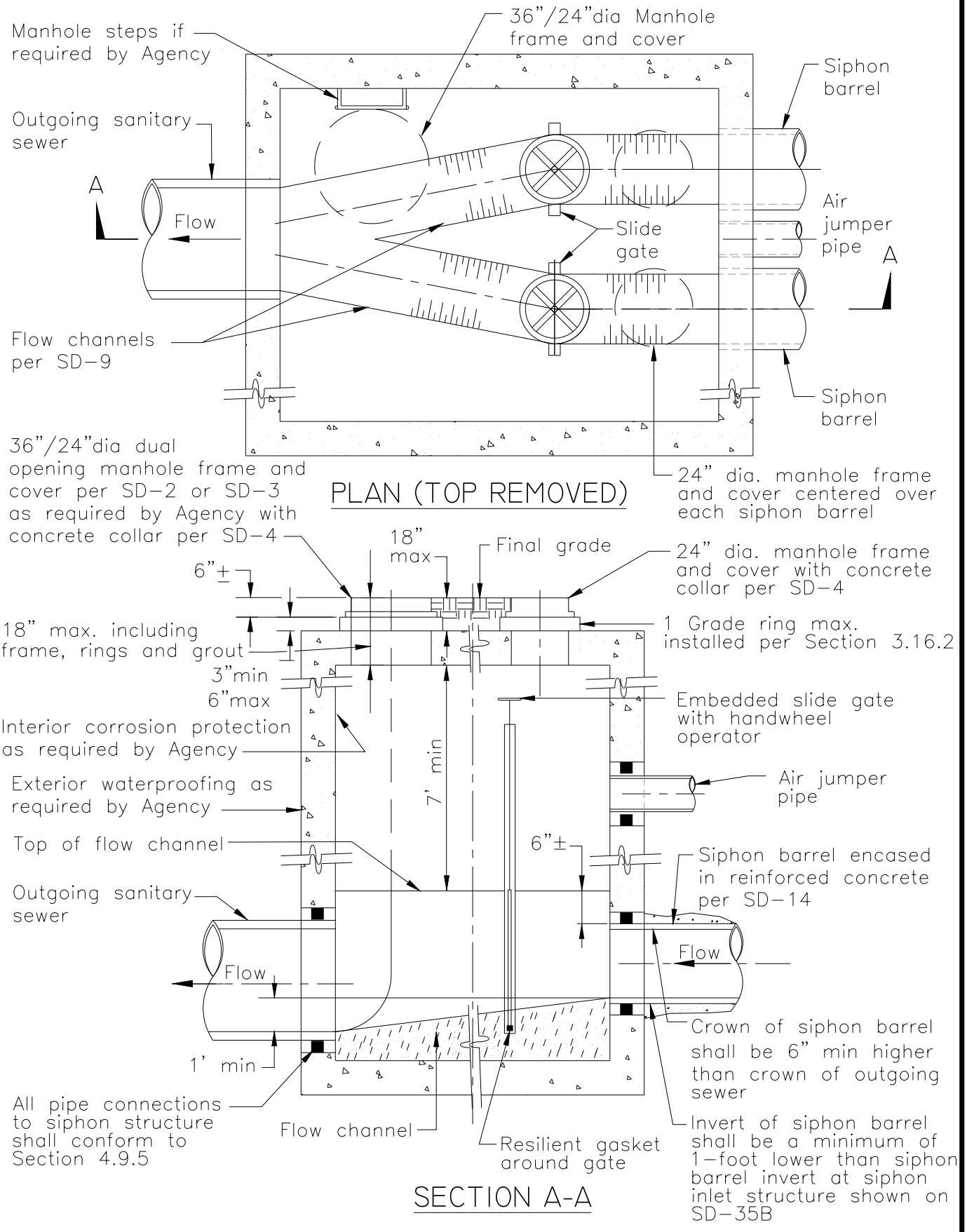

TYPICAL SIPHON OUTLET STRUCTURE

ISSUED:	NUMBER: SD-35A

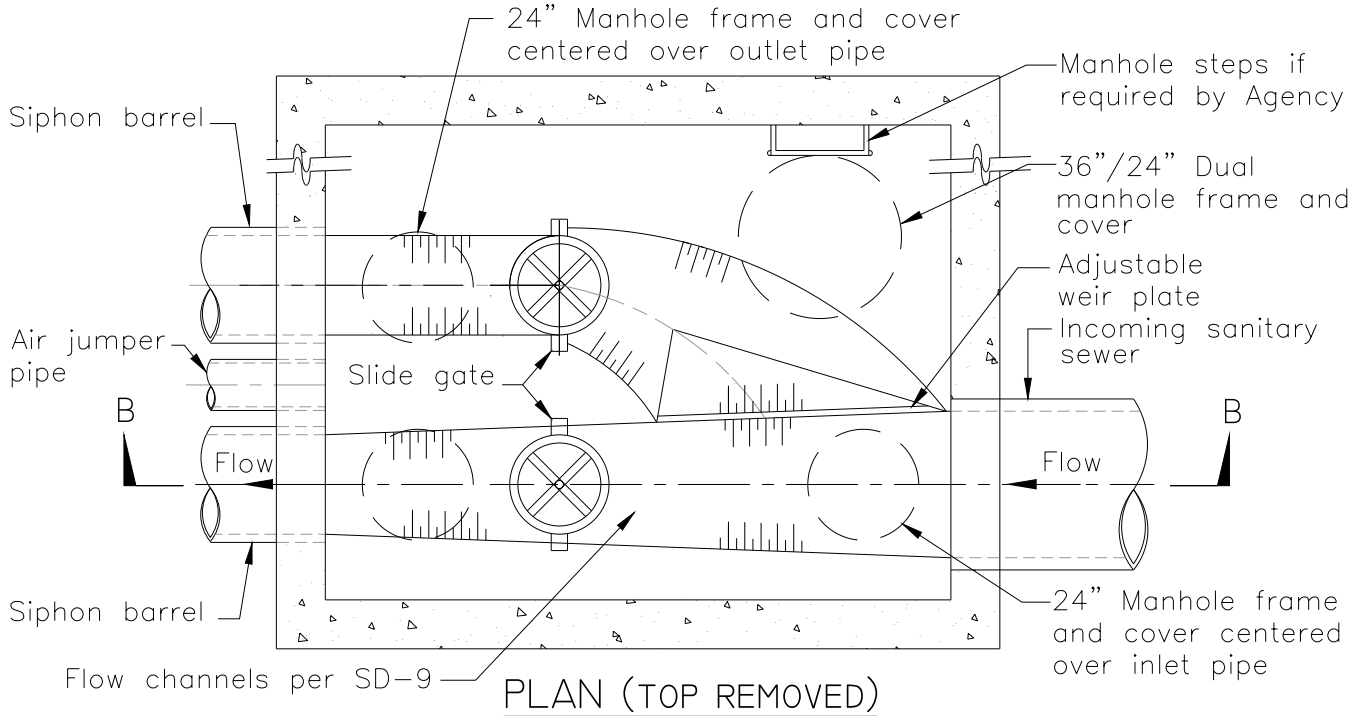

PLAN (TOP REMOVED)

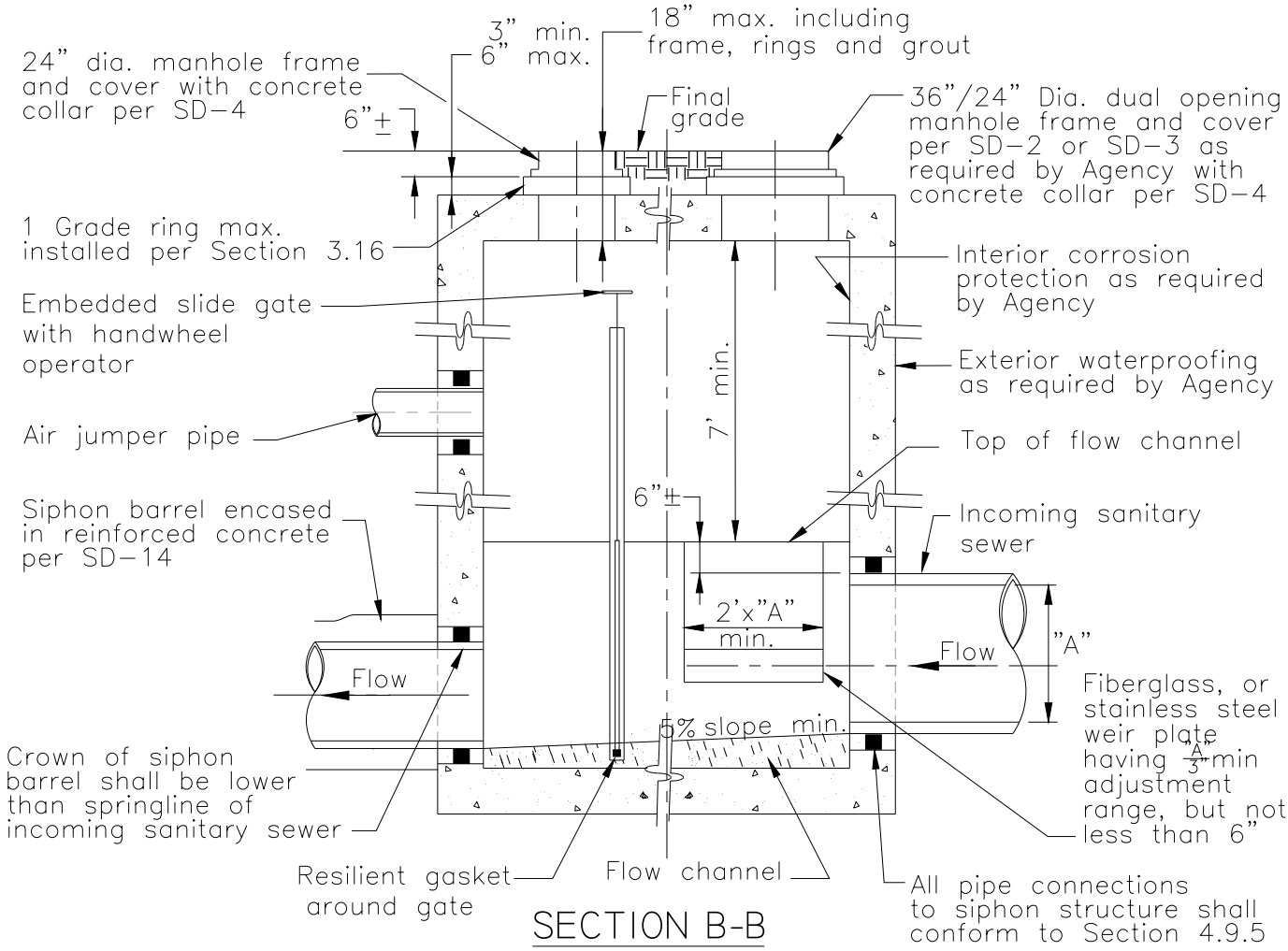

SECTION B-B

TYPICAL SIPHON INLET STRUCTURE

ISSUED:	NUMBER: SD-35B

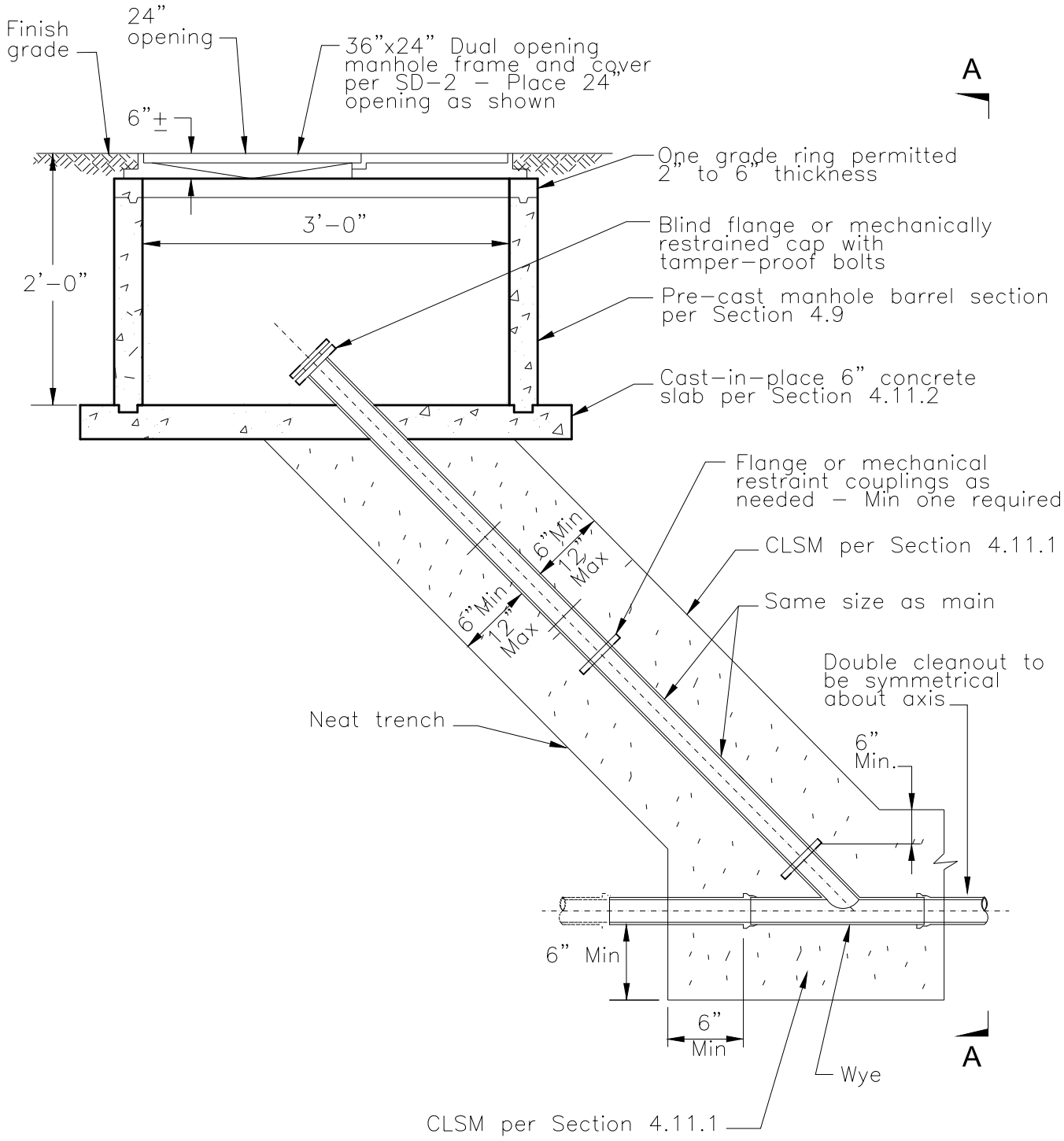

NOTES:

1. All pipes shall be PVC or DIP conforming to Section 4.6 as required by the Agency.
2. Final configuration of cleanout shall be shown in the construction documents.

TYPICAL FORCE MAIN CLEAN-OUT

ISSUED:	NUMBER: SD-36A

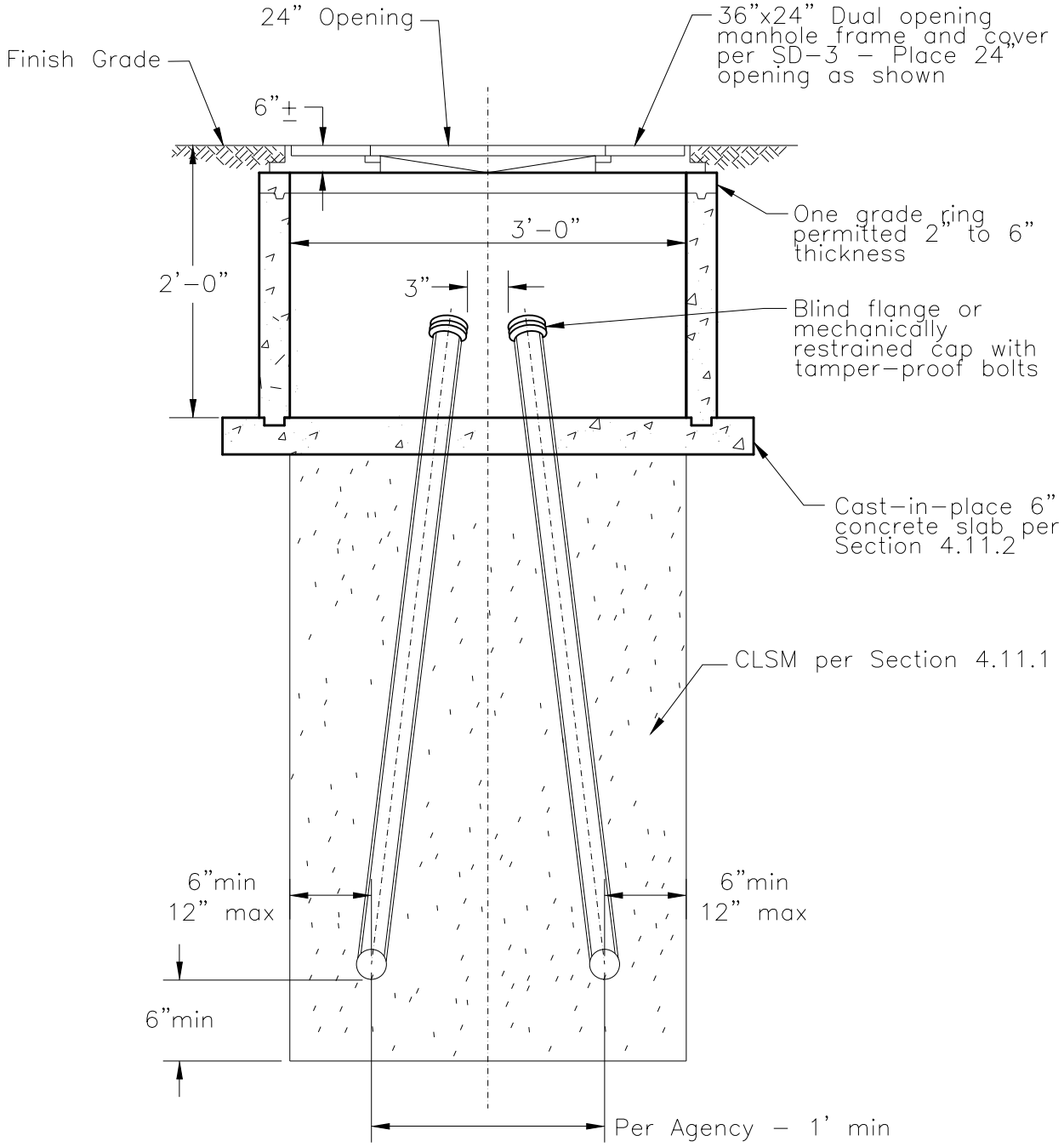

NOTES:

1. All pipes shall be PVC or DIP conforming to Section 4.6 as required by the Agency.
2. Final configuration of cleanout shall be shown in the construction documents.

TYPICAL FORCE MAIN CLEAN-OUT

ISSUED:	NUMBER: SD-36B

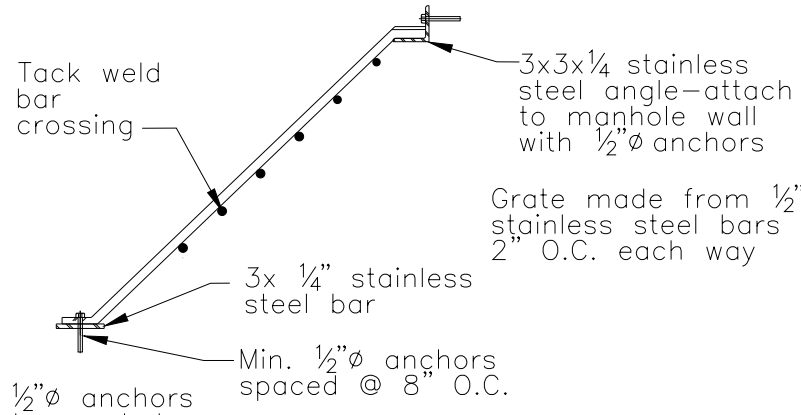

GRATE DETAIL

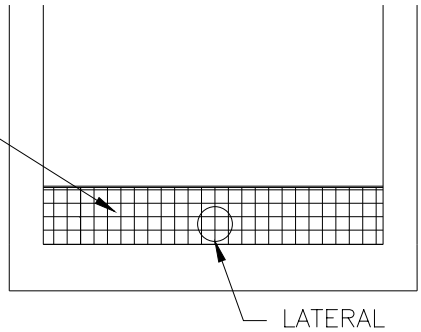

section a-a

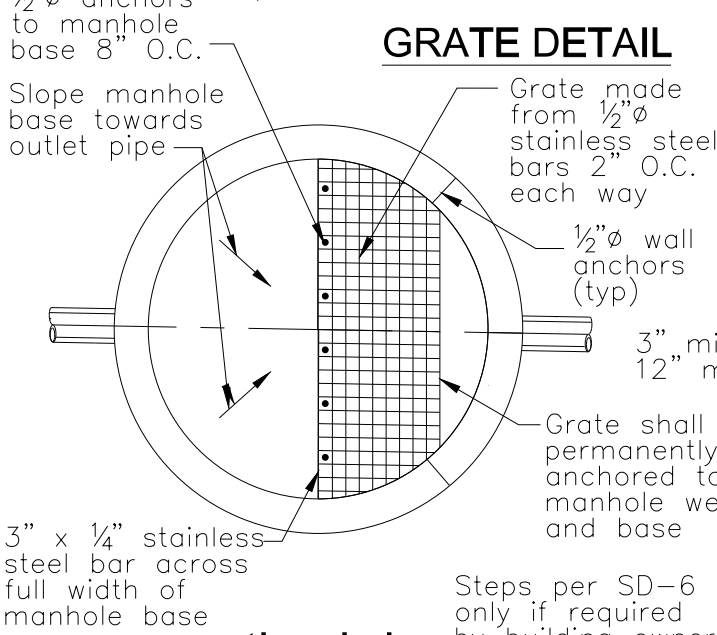

section b-b

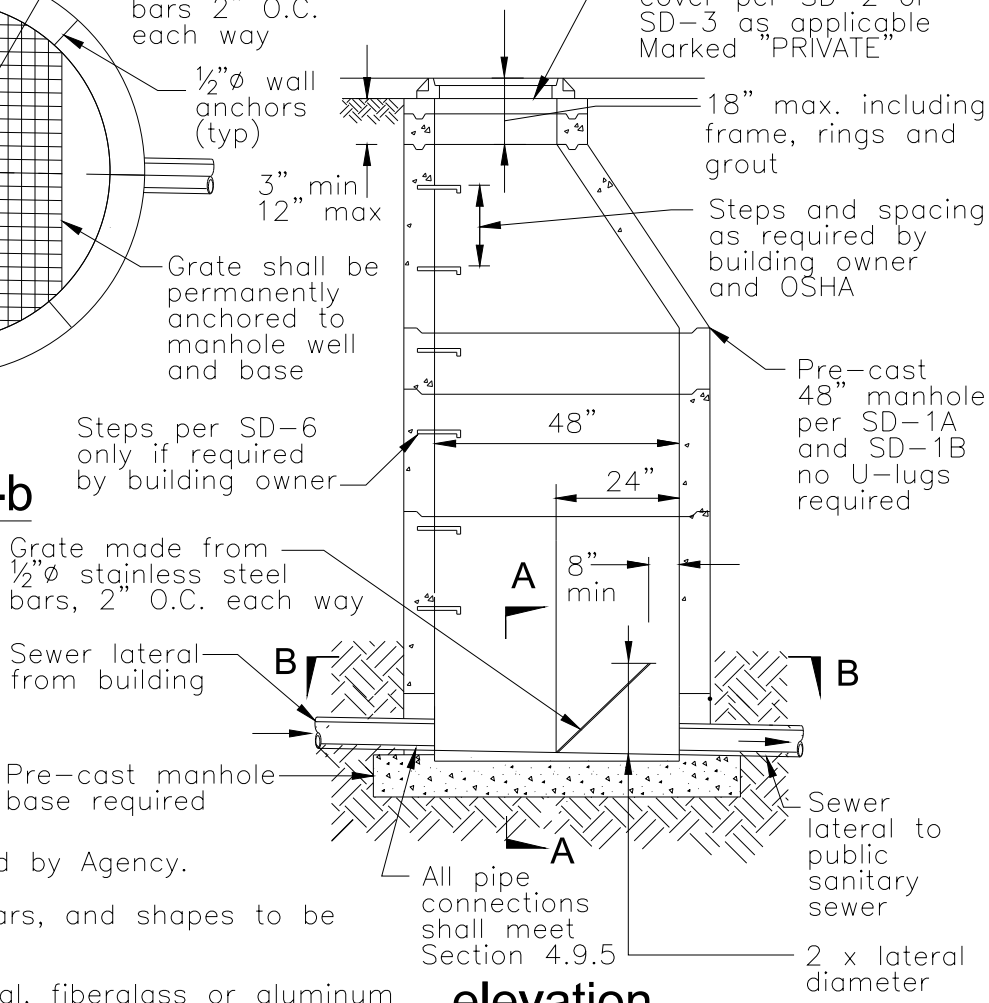

elevation

NOTES:

1. Install where directed by Agency.
2. All stainless steel bars, and shapes to be "Type 316".
3. Upon Agency approval, fiberglass or aluminum grating and like material ancillary components may be substituted for stainless steel bar grating. Engineer shall submit design drawings of alternate grating materials to Agency for approval at least 30 days prior to construction.

DEBRIS SCREEN

ISSUED:	NUMBER: SD-37

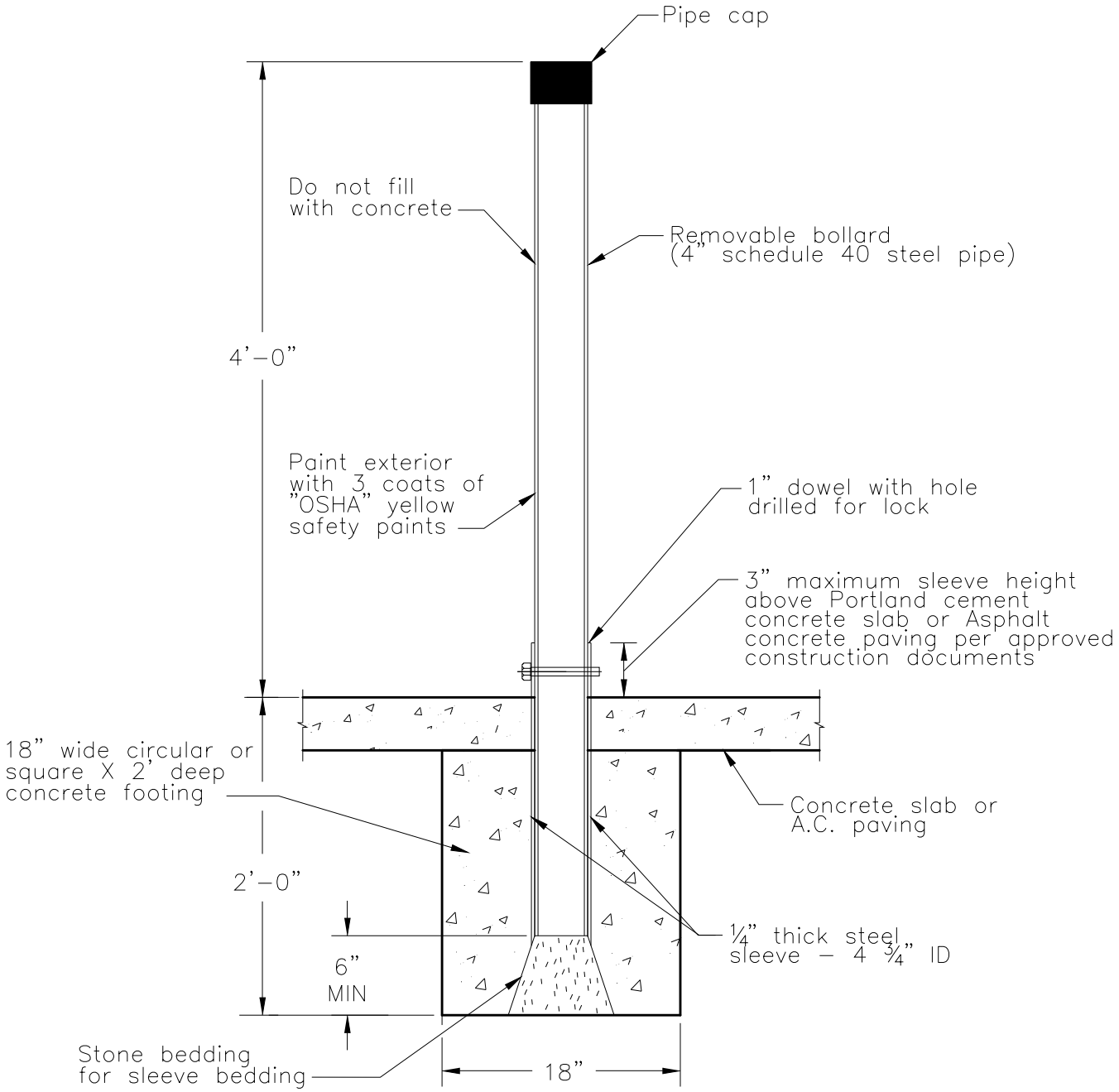

BOLLARD DETAIL (REMOVABLE, LOCKING)

ISSUED:	NUMBER: SD-38

THIS PAGE LEFT BLANK INTENTIONALLY

DESIGN AND CONSTRUCTION STANDARDS

SECTION 6

TABLES

DESIGN AND CONSTRUCTION STANDARDS

SECTION 6

LIST OF TABLES

Table	Title	Page
A	Easement Widths	T-1
B	Inspection Charge Statement of Authorization and Responsibility	T-2
C	Ratio of Peak Flow to Average Daily Flow, Clark County Nevada	T-3
D	Minimum Required and Maximum Permitted Pipe Slopes	T-4
E	Data Sheet for Plan Approval	T-5
F	General Notes for Drawings	T-6
G	Lift Station Data Sheet	T-8
H	Backfill Materials	T-9
I	Compaction Testing	T-11
J	Low Pressure Air Test for Gravity Sewer Lines	T-12
K	Force Main Allowable Leakage	T-13

TABLE “A”

EASEMENT WIDTHS

MINIMUM EASEMENT WIDTHS FOR
SEWER MAINS AND FORCE MAINS

Main Diameter	Cover Depth	Minimum Easement Width [1]
All Force mains	< 8 ft.	20 ft.
All Sewer Mains:		
15-inches and less	<10 ft.	20 ft.
15-inches and less	10-15 ft.	30 ft.
15-inches and less	15-20 ft.	40 ft.
15-inches and less	>20 ft.	50 ft.
16 to 30-inches	<10 ft.	30 ft.
16 to 30-inches	10-20 ft.	40 ft.
16 to 30-inches	>20 ft.	50 ft.
Greater than 30-inches	Any	Per Agency

[1] Easements shall be increased in width by a minimum of 10-feet for each additional underground or overhead utility placed within the easement.

TABLE “B”

_____ (AGENCY NAME)

INSPECTION CHARGE
STATEMENT OF AUTHORIZATION AND RESPONSIBILITY

_____
Inspection Charge Authorization

_____
(Agency Name)

Date:_____

Sat. Sun._____

_____
(Street Address)

Holiday_____

_____ Week Day_____
(City-State-Zip Code)

_____
Job No. Job Title Overtime Worked

_____
Permittee or Contractor

_____
Type of Work Constructed During Overtime

_____
Contractor’s Reason for Working Overtime

/
_____
Inspector’s Signature Contractor’s Signature

Should the Contractor desire to work outside the established normal working hours, as established by each Agency (five days a week, eight hours each day, or as established by the Agency), for which the Agency is required to pay overtime, with prior approval from the Agency, he may do so by notifying the Agency’s Representative forty-eight (48) hours in advance of the additional hours to be worked, and by paying an overtime inspection fee as established by each Agency, for each hour or each portion of each hour thereof, to provide for an inspector to be present. The Contractor will be required to sign this document which constitutes approval of an overtime inspection fee. Callouts after hours will be charged a minimum of three (3) hours overtime. The Contractor will also be required to pay overtime charges for any Agency approved holidays.

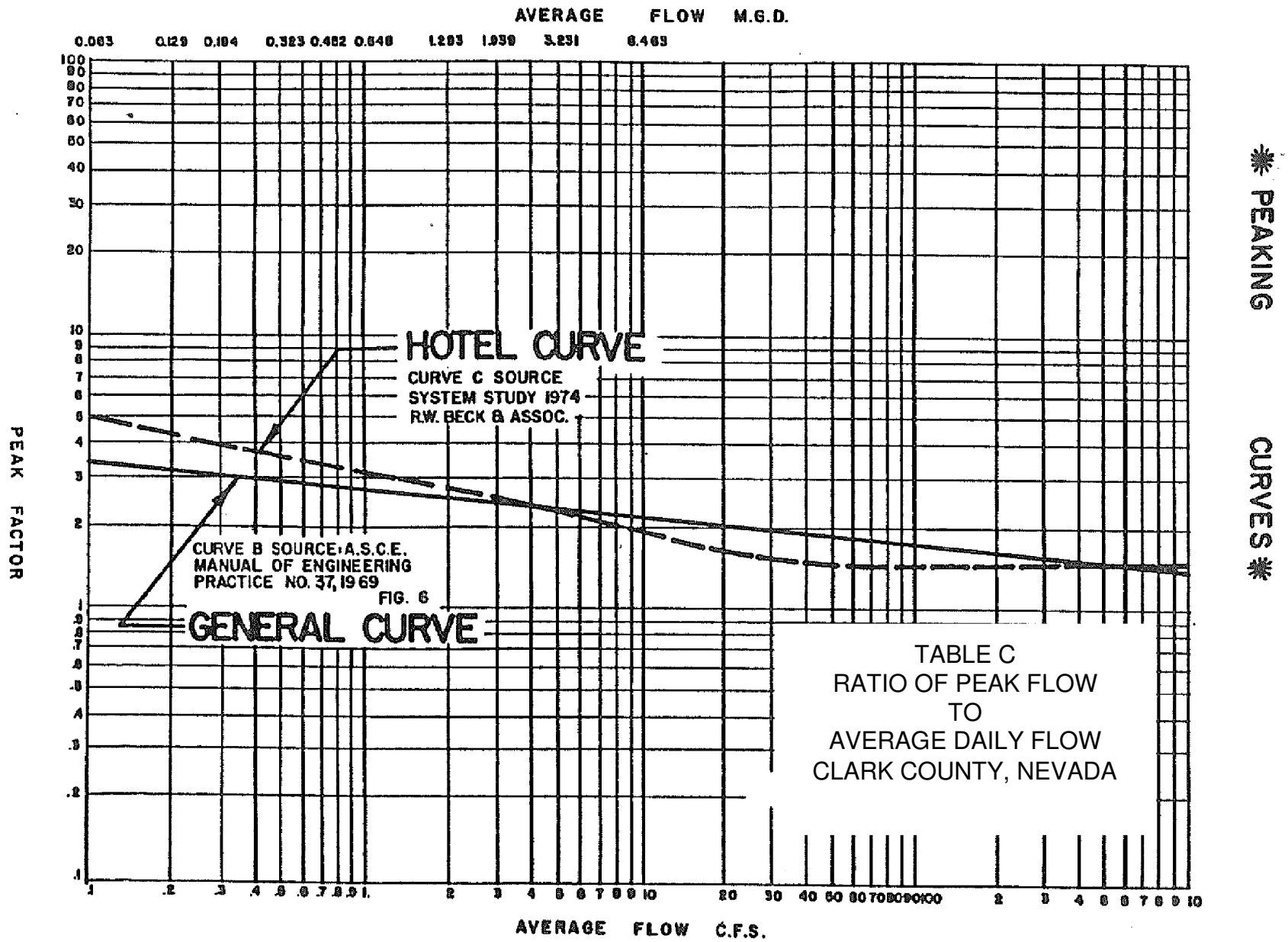

* PEAKING CURVES *

TABLE C
RATIO OF PEAK FLOW
TO
AVERAGE DAILY FLOW
CLARK COUNTY, NEVADA

TABLE “D”

MINIMUM REQUIRED AND MAXIMUM PERMITTED PIPE SLOPES

Pipe Diameter (Inches)	Minimum Flow Rate (Cu Ft Per Sec) To Achieve a 50% Full Pipe at Min Slope	Minimum Slope (Feet per Foot) to Achieve a Velocity of 2 FPS at Pipe 50% full	Maximum Flow Rate (Cu Ft Per Sec) to Limit Depth to 75% Full Pipe at Max Slope	Maximum Slope (Feet per Foot) To Limit Velocity to 10 FPS at Pipe 75% Full
Laterals – Range of Pipe Slopes Permitted (flow rates and velocities not considered)				
4	(Not Applicable)	0.0200	(Not Applicable)	(Not Applicable)
6	(Not Applicable)	0.0100	(Not Applicable)	(Not Applicable)
8	(Not Applicable)	0.0100	(Not Applicable)	(Not Applicable)
Public and Private Collector Sewers – having insufficient tributary flow to achieve half-full flow depth at peak dry weather flow rate from the tributary area				
8	(Not Applicable)	0.0060	(Not Applicable)	(Not Applicable)
10	(Not Applicable)	0.0060	(Not Applicable)	(Not Applicable)
≥10	(Not Applicable)	0.0060	(Not Applicable)	(Not Applicable)
Public Interceptors, Public Collector Sewers and Private Collector Sewers having sufficient tributary flow to achieve at least a half-full flow depth at the peak dry weather flow rate from the tributary area				
8	0.40	0.0033	3.21	0.0646
10	0.55	0.0025	5.02	0.0479
12	0.79	0.0020	7.23	0.0376
15	1.23	0.0015	11.29	0.0279
18	1.77	0.0012	16.26	0.0219
21	2.40	0.0010	22.13	0.0178
24	3.14	0.0008	28.90	0.0149
>24	Per Agency requirements			

The Agency will review the proposed slopes for larger pipes and pipes that will exceed the above maximum slope values on a case-by-case basis. Sewers at slopes less than the minimum slopes listed in Table “D” will not be permitted.

TABLE E

_____
(Agency Name)

_____
(Street Address)

_____
(City / State / Zip)

_____
(Telephone No.)

DATA SHEET FOR PLAN APPROVAL

Title _____
_____
_____

Date _____

ENGINEER:

NAME	
ADDRESS	
CITY, STATE	ZIP
TELEPHONE	

DEVELOPER:

NAME	
ADDRESS	
CITY, STATE	ZIP
TELEPHONE	

DEVELOPER'S REPRESENTATIVE:

NAME	
ADDRESS	
CITY, STATE	ZIP
TELEPHONE	

NOTE:

Submitted with this data sheet are three complete sets of plans, along with other information the engineer feels is necessary to have this job reviewed

TABLE "F"

GENERAL NOTES FOR DRAWINGS

1. All Construction And Materials Shall Conform To The Latest Edition Of The Design And Construction Standards For Wastewater Collection Systems Latest Edition; Uniform Design And Construction Standards For Potable Water Systems, Latest Edition; The Uniform Standards For Public Works Construction Off-Site Improvements, Clark County, Nevada, As Amended; and the Uniform Plumbing Code. Contractor Shall Advise The Controlling Agency Of Any Conflicts Discovered Between These Specifications Prior To Proceeding With The Work Governed By The Conflicting Requirements. The Engineer And/Or Contractor Shall Propose A Resolution To The Conflict For Review By The Agency Prior To Performing The Work Affected By The Conflict. The Resolution Shall Generally Be In The Manner That Yields The Higher Quality And/Or Performance Of The Work. The Controlling Agency Shall Issue Written Approval For The Resolution Of The Conflict Which Shall Become A Part Of The Construction Documents For The Work.

2. These Standards Apply To All Construction.

3. Sewer Mains Shall Be Laid Individually In Trenches That Are Independent From The Trenches For Other Utilities.

4. All Laterals Shall Be Laid At Slopes Not Less Than The Minimum Slopes Shown In These Specifications.

5. It Shall Be The Contractor's Sole Responsibility To Perform Construction In Full Conformance With The Approved Construction Documents. Should The Developer, Engineer Or Contractor Wish To Make Changes To The Approved Construction Documents, Such Changes Shall Be Approved By The Agency Prior To Construction Of The Affected Improvements. Changes Constructed Without Agency Approval Shall Be Removed By The Contractor At Its Own Expense And The Work Constructed As Depicted In The Approved Construction Documents.

6. Soil Testing Shall Be Performed In Accordance With Section 3.15 Of The Design And Construction Standards For Wastewater Collection Systems, Latest Edition.

7. All Air Testing, Visual Inspections, System Cleaning, Deflection Testing, Televising, Pressure Testing And Leakage Testing Shall Be In Accordance With Section 3.19 Of The Design And Construction Standards For Wastewater Collection Systems, Latest Edition.

8. Cut Sheets Conforming To Section 3.6 Of The Design And Construction Standards For Wastewater Collection Systems, Latest Edition Shall Be Submitted By The Contractor To The Controlling Agency For Review Before Beginning Construction. Contractor Shall Not Begin Construction Until Authorized By The Agency.

9 Contractors Installing Sewer Mains That Will Be Under The Jurisdiction Of The Agency Shall Possess A Class "A" License Per The Nevada State Contractor's Board.

TABLE "F" (Continued)

GENERAL NOTES FOR DRAWINGS

10. When Connecting To An Existing Stub, Contractor Shall Clean And Test Both The New And Existing Portions Of The Line To The Next Manhole Upstream/Downstream.

11. All Sanitary Sewer Manholes Shall Be Located And Constructed Such That They Are Accessible To Conventional Sewer Maintenance Vehicles At All Times And Under All Weather Conditions. Those Manholes Installed Along Access Roads Having Single Points Of Entry And Egress (i.e. "Dead-End Roads") Shall Have At Least One Location Along The Access Road Having Sufficient Width To Allow Turn-Arounds Of Vehicles Having Inside Turning Radii Of 50-Feet.

12. All Sewer Mains Under Construction Shall Have A Debris Trap Per Standard Drawing SD-30 At The Point Of Connection To The Existing Sewer System Until All Construction Activities, Including Final Testing, Are Completed And The Sewer Is Ready For Final Acceptance By The Agency.

13. All Manholes Under Construction Shall Have Plugs Placed In Their Outlet Pipes During All Construction Activities To Prevent The Migration Of Sewer Construction Debris Downstream. These Plugs May Be Removed For Short Periods As Necessary To Accomplish Final Sewer Cleaning And Testing Tasks Prior To Final Acceptance Of The Improvements.

14. Prior To Any Sewer Main Being Placed In Service And As A Condition Of Final Acceptance, All New Sewer Mains Shall Be Televised In Accordance With Section 3.19.1.e Of The Design Standards.

15. If Any Existing Manhole Having A Lining System Is Being Modified As Part Of The Construction Of The New Sanitary Sewer, That Lining System Shall Be Restored To Its Original Condition Prior To The Modifications Using Lining Materials And Systems That Are Fully Compatible With The Original Lining.

16. Field-Installed Sewer Lining Systems May Not Be Installed Until After All Manhole Construction Tasks Are Completed, Including Backfilling And Initial Grade Adjustments, But Prior To Final Grade Adjustment.

17 New Sewers Having Grades Of 0.5 Percent Or Less Shall Be Staked For Construction At A Maximum Of 25-Feet On Center.

18. Sewer Laterals Shall Be Connected To Sewer Mains Only. Laterals May Not Be Connected To Sanitary Sewer Manholes Unless Approved By The Agency.

19. Sewer Pipe Material, Pipe Specification, Wall Thickness, Internal Diameter And Pipe Slope Shall Be Uniform Between Manholes. Changes In Pipe Materials, Specifications, Wall Thicknesses, Internal Diameters And/Or Pipe Slopes Shall Be Made At Manholes Only.

20 Locator Ribbon And Marker Balls Shall Be Placed Above All New Sanitary Sewers, Laterals And Force Mains In Accordance With Section 3.14 Of The Design Standards.

Table "G"

_____ (Agency Name)
_____ (Street Address)
_____ (City/State/Zip)
_____ (Telephone No.)

LIFT STATION DATA SHEET

GENERAL:

1. Owner's Name :_____
2. Plant Location :_____
3. Elevation Above Sea Level :_____
4. Type of Service :_____

LIFT STATION:

1. Manufactured By :_____
2. Manufacturer's Designation :_____
3. Manufacturer's Serial Number :_____
4. Size Suction: Nominal :_____in.
   Actual :_____in.
5. Size Discharge: Nominal :_____in.
   Actual :_____in.

INTERMEDIATE :

1. Manufactured By :_____
2. Type :_____
3. Serial Number :_____
4. Speed Ratio :_____
5. Efficiency :_____

DRIVER:

1. Manufactured By :_____
2. Serial Number :_____
3. Rated Horsepower :_____
4. Rated Speed :_____
5. Characteristics :_____
   (voltage, frequency, etc.) _____

RATED CONDITIONS:

1. Capacity :_____gpm.
2. Total Suction Lift (h_s) :_____ft.
   Head (h_s) :_____ft.
3. Net Positive Suction Head
   (NPSH) :_____ft.
4. Total Discharge Head (H_d) :_____ft.
5. Total Head (H) :_____ft.
6. Liquid Horsepower (whp) :_____hp.
7. Efficiency (E_p) :_____percent
8. Brake Horsepower (bhp) :_____hp.
9. Speed :_____rpm.

ATTACHMENTS:

1. Pump Curves
2. Shop Drawings of Station Before Approval for Construction
3. Manufacturer's Specifications
4. Electrical Diagrams

Table "H"

BACKFILL MATERIALS

Backfill Materials shall conform to the requirements of Sections 207, 208 and 704 of the Uniform Standard Specifications for Public Works Construction Off-Site Improvements latest edition as referenced below.

TYPE II MATERIAL: Type II material shall conform to Section 704.03.04 and to the following requirements:

Gradation:	Sieve Sizes	Percentage by Dry Weight Passing Sieve
	1 inch	100
	¾ inch	90 – 100
	No. 4	35 – 65
	No. 16	15 – 40
	No. 200	2 – 10

Plastic Limits:	Percentage by Weight Passing No. 200 Sieve	Plasticity Index Maximum
	0.1 to 3.0	15
	3.1 to 4.0	12
	4.1 to 5.0	9
	5.1 to 8.0	6
	8.1 to 11.0	4
	11.1 to 15.0	3

GRANULAR BACKFILL: Granular material shall conform to Section 207.02.02 and the following requirements:

Gradation:	Sieve Sizes	Percentage of Weight Passing
	3 inch	100
	No. 4	35 – 100
	No. 16	25 – 100
	No. 200	5 – 15

Plastic Limits: As specified for Type II material above.

Table "H" (Continued)

BACKFILL MATERIALS

SELECTED BACKFILL: Selected backfill shall conform to Section 207.02.01 and the following requirements:

Gradation:	Sieve Sizes	Percentage of Weight Passing
	6 inch	100 *
	3 inch	80 – 100
	No. 4	35 – 100

* Stones or lumps greater than 3 inches in diameter shall not be used within the zone 12 inches from the pipe, structure or finished subgrade.

Plastic Limits:	Percentage by Weight Passing No. 200 Sieve	Plasticity Index Maximum
	0 – 10.0	15
	10.0 – 20.0	12
	20.1 – 50.0	10
	50.1 – 80.0	8
	80.1 – 100.0	6

Liquid Limit: LL = Maximum 50

CRUSHED ROCK: Crushed rock is material that conforms to Section 704.03.06 and the following gradation:

63% fracture one side. 30% fractured two sides.

Screen or Sieve Sizes	Percent Passing
3/8 inch	0 – 100
No. 4	20 – 80
No. 200	0 – 15

SAND: Sand is material that conforms to Section 208.02.04 and the following gradation:

Sieve Sizes	Percent Passing
3/8	100
#4	80 – 100
#200	5 – 20

TABLE “I”

COMPACTION TESTING

QUALITY CONTROL FOR TRENCH BACKFILL COMPACTION

TEST AREA	MINIMUM TEST FREQUENCY
Pipe bedding materials	1 per 200 L.F. of trench (and each branch or section of trench less than 450 feet in length) for each 2-feet of vertical depth of backfill at the location(s) as directed by the Agency.
Pipe haunching materials	
Pipe trench backfill from haunching to subgrade	
Subgrade	As required by controlling Agency at the location(s) as directed by the Agency.
Subgrade of all Agency structures (manholes, catch basins, valves, vaults, etc.)	1 per each 2 foot vertical depth of backfill around structure perimeter at the location(s) as directed by the Agency.
Backfill of all structures (manholes, catch basins, valves, vaults, siphon structures, pump stations, and other sanitary system facilities installed by the Contractor.)	

TABLE “J”

LOW PRESSURE AIR TEST FOR GRAVITY SEWER LINES

MINIMUM TEST TIMES FOR PLASTIC PIPE

Pipe Dia, in.	Min Time, min’s	Length for Min Time, ft	Time for Longer Length, s	Specification Time for Length (L) Shown, min:s							
				100	150	200	250	300	350	400	450
4	3:46	597	0.380 L	3:46	3:46	3:46	3:46	3:46	3:46	3:46	3:46
6	5:40	398	0.854 L	5:40	5:40	5:40	5:40	5:40	5:40	5:42	6:24
8	7:34	298	1.520 L	7:34	7:34	7:34	7:34	7:36	8:52	10:08	11:24
10	9:26	239	2.374 L	9:26	9:26	9:26	9:53	11:52	13:51	15:49	17:48
12	11:20	199	3.418 L	11:20	11:20	11:24	14:15	17:05	19:56	22:47	25:38
15	14:10	159	5.342 L	14:10	14:10	17:48	22:15	26:42	31:09	35:36	40:04
18	17:00	133	7.692 L	17:00	19:13	25:38	32:03	38:27	44:52	51:16	57:41
21	19:50	114	10.470 L	19:50	26:10	34:54	43:37	52:21	61:00	69:48	78:31
24	22:40	99	13.674 L	22:47	34:11	45:34	56:58	68:22	79:46	91:10	102:33
27	25:30	88	17.306 L	28:51	43:16	57:41	72:07	86:32	100:57	115:22	129:48
30	28:20	80	21.366 L	35:37	53:25	71:13	89:02	106:50	124:38	142:26	160:15
33	31:10	72	25.852 L	43:05	64:38	86:10	107:43	129:16	150:43	172:21	193:53
36	34:00	66	30.768 L	51:17	76:55	102:34	128:12	153:50	179:29	205:07	230:46

Table data from ASTM F 1417-92

MINIMUM TEST TIMES FOR
VITRIFIED CLAY OR OTHER PIPE

Nominal Pipe Size, in.	T (time), min/100 ft.	Nominal Pipe Size, in.	T (time), min/100 ft.
48	8.50	21	3.00
4	0.30	24	3.60
6	0.70	27	4.20
8	1.20	30	4.80
10	1.50	33	5.40

Table data from ASTM C 828-03

TABLE “K”

FORCE MAIN ALLOWABLE LEAKAGE

ALLOWABLE LEAKAGE PER 1000 FT. OF PIPELINE DUCTILE IRON (gph)

Ave Test Press, psi	Nominal Pipe Diameter, in.																
	4	6	8	10	12	14	16	18	20	24	30	36	42	48	54	60	64
450	0.57	0.86	1.15	1.43	1.72	2.01	2.29	2.58	2.87	3.44	4.30	5.16	6.02	6.88	7.74	8.60	9.17
400	0.54	0.81	1.08	1.35	1.62	1.89	2.16	2.43	2.70	3.24	4.05	4.86	5.68	6.49	7.30	8.11	8.65
350	0.51	0.76	1.01	1.26	1.52	1.77	2.02	2.28	2.53	3.03	3.79	4.55	5.31	6.07	6.83	7.58	8.09
300	0.47	0.70	0.94	1.17	1.40	1.64	1.87	2.11	2.34	2.81	3.51	4.21	4.92	5.62	6.32	7.02	7.49
275	0.45	0.67	0.90	1.12	1.34	1.57	1.79	2.02	2.24	2.69	3.36	4.03	4.71	5.38	6.05	6.72	7.17
250	0.43	0.64	0.85	1.07	1.28	1.50	1.71	1.92	2.14	2.56	3.21	3.85	4.49	5.13	5.77	6.41	6.84
225	0.41	0.61	0.81	1.01	1.22	1.42	1.62	1.82	2.03	2.43	3.04	3.65	4.26	4.86	5.47	6.08	6.49
200	0.38	0.57	0.76	0.96	1.15	1.34	1.53	1.72	1.91	2.29	2.87	3.44	4.01	4.59	5.16	5.73	6.12
175	0.36	0.54	0.72	0.89	1.07	1.25	1.43	1.61	1.79	2.15	2.68	3.22	3.75	4.29	4.83	5.36	5.72
150	0.33	0.50	0.66	0.83	0.99	1.16	1.32	1.49	1.66	1.99	2.48	2.98	3.48	3.97	4.47	4.97	5.30
125	0.30	0.45	0.60	0.76	0.91	1.06	1.21	1.36	1.51	1.81	2.27	2.72	3.17	3.63	4.08	4.53	4.83
100	0.27	0.41	0.54	0.68	0.81	0.95	1.08	1.22	1.35	1.62	2.03	2.43	2.84	3.24	3.65	4.05	4.32

Table data from AWWA C600-05

ALLOWABLE LEAKAGE PER 1000 FT. OF PIPELINE PVC (gph)

Average Test Pressure, psi	Nominal Pipe Diameter, in.													
	4	6	8	10	12	14	16	18	20	24	30	36	42	48
300	0.47	0.70	0.94	1.17	1.40	1.64	1.87	2.11	2.34	2.81	3.51	4.21	4.92	5.62
275	0.45	0.67	0.90	1.12	1.34	1.57	1.79	2.02	2.24	2.69	3.36	4.03	4.71	5.38
250	0.43	0.64	0.85	1.07	1.28	1.50	1.71	1.92	2.14	2.56	3.21	3.85	4.49	5.13
225	0.41	0.61	0.81	1.01	1.22	1.42	1.62	1.82	2.03	2.43	3.04	3.65	4.26	4.86
200	0.38	0.57	0.76	0.96	1.15	1.34	1.53	1.72	1.91	2.29	2.87	3.44	4.01	4.59
175	0.36	0.54	0.72	0.89	1.07	1.25	1.43	1.61	1.79	2.15	2.68	3.22	3.75	4.29
150	0.33	0.50	0.66	0.83	0.99	1.16	1.32	1.49	1.66	1.99	2.48	2.98	3.48	3.97
125	0.30	0.45	0.60	0.76	0.91	1.06	1.21	1.36	1.51	1.81	2.27	2.72	3.17	3.63
100	0.27	0.41	0.54	0.68	0.81	0.95	1.08	1.22	1.35	1.62	2.03	2.43	2.84	3.24
75	0.23	0.35	0.47	0.59	0.70	0.82	0.94	1.05	1.17	1.40	1.76	2.11	2.46	2.81
50	0.19	0.29	0.38	0.48	0.57	0.67	0.76	0.86	0.96	1.15	1.43	1.72	2.01	2.29

Table data from AWWA C605-05

THIS PAGE LEFT BLANK INTENTIONALLY

DESIGN AND CONSTRUCTION STANDARDS

SECTION 7

INDEX

THIS PAGE LEFT BLANK INTENTIONALLY

INDEX TO DESIGN AND CONSTRUCTION STANDARDS

Abandonment of Existing Facilities, Section 3.18, (Job Start/Pre-Inspection), (1-14)
Abandonment of Existing Facilities, (3-28)
    Main Lines and Laterals, (3-28)
    Manholes, (3-29)
Abbreviations, (1-5)
Additional Requirements for Manhole Bases, (Manholes and Manhole Appurtenances), (2-7)
Additional Requirements for Large Multi-Family (Greater Than Four Units Per Building), Commercial and Industrial Laterals, (Design Criteria for Gravity Sewers), (2-16)
Additional Requirements for Pre-Cast Concrete Grade Rings, (Manholes and Manhole Appurtenances), (2-8)
Additional Requirements for Pre-Cast Concrete Section and Grade Ring Joints, (Manholes and Manhole Appurtenances), (2-8)
Adjusting Manholes, (Occupancy Permit Guidelines/Minor Requirements), (3-40)
Aerial Crossings, (Design Criteria for Force Mains), (2-30)
Aerial Crossings of Sanitary Sewers and Air Jumper Pipes, (Other Utility Crossings and Clearances, Aerial Crossings, and Parallel Utility Installations), (2-18)
Agency Notice of Operation, (Bypass Pumping), (3-7)
Agency Pipeline Encroachment – Blasting, (3-7)
    Agency Representation, (3-9)
    Blaster Qualifications, (3-8)
    Blasting Monitoring, (3-9)
    Blasting Plan, (3-7)
    Blasting Plan Modifications, (3-9)
    Contractor Responsibility for Blasting, (3-7)
    Existing Facility Inspection, (3-8)
    Independent Blasting Consultant, (3-9)
Agency Representation, (Agency Pipeline Encroachment – Blasting), (3-9)
Agency's Representative, (Definitions), (1-3)
Air Relief Valves, (Design Criteria for Force Mains), (2-29)
Air-Vacuum and Air-Release Valves, (Valves), (4-12)
Allowable Leakage, (Initial Sanitary System Construction Acceptance (Initial Acceptance) of Force Mains), (3-36)
Approval of New Materials, (4-1)
Approved Materials, (1-18)
Assembling Pre-Cast Concrete Manhole Components, (Manhole and Cast-in-Place Structure Installation), (3-20)

Backfill Procedure After Test, (Initial Sanitary System Construction Acceptance (Initial Acceptance) of Force Mains), (3-36)
Below-Grade Utility Crossings and Clearances, (Other Utility Crossings and Clearances, Aerial Crossings, and Parallel Utility Installations), (2-17)
Blasting Monitoring, (Agency Pipeline Encroachment – Blasting), (3-9)
Blasting Plan, (Agency Pipeline Encroachment – Blasting), (3-7)
Blasting Plan Modifications, (Agency Pipeline Encroachment – Blasting), (3-9)
Blaster Qualifications, (Agency Pipeline Encroachment – Blasting), (3-8)
Boring or Jacking Sewer Pipe, (Design Criteria for Gravity Sewers), (2-21)

INDEX TO DESIGN AND CONSTRUCTION STANDARDS

Bypass Pumping, (3-4)
- Agency Notice of Operation, (3-7)
- Bypass System Capacity, (3-5)
- Bypass System Maintenance and Operation, (3-7)
- Bypass System Power Source, (3-6)
- Bypass System Traffic Protection, (3-6)
- Noise Attenuation, (3-5)
- Odor Control Requirements, (3-6)
- Prohibition Against Sanitary System Overflows, (3-5)
- Pumping Equipment, (3-5)
- Use of New Sanitary Sewers, (3-5)

Bypass System Capacity, (Bypass Pumping), (3-5)
Bypass System Maintenance and Operation, (Bypass Pumping), (3-7)
Bypass System Power Source, (Bypass Pumping), (3-6)
Bypass System Traffic Protection, (Bypass Pumping), (3-6)

Calculation of Peak Wastewater Flow, (Design Criteria for Gravity Sewers), (2-1)
Cast-in-Place Concrete Structures, (Manhole and Cast-in-Place Structure Installation), (3-21)
Cement / Concrete, (4-10)
- Concrete, (4-11)
- Controlled Low Strength Material (CLSM), (4-10)

Certifications of Installation Procedures, (3-3)
Changes of Flow Direction Within Manholes, (Manholes and Manhole Appurtenances), (2-8)
Check Valves, (Valves), (4-12)
Cleaning Sewers, (Occupancy Permit Guidelines/Major Requirements), (3-39)
Complete, Bound, Signed / Sealed Document Sets Required, (Construction Document Requirements), (2-23)
Completion Guarantee in Emergency Situations, (Occupancy Permit Guidelines), (3-40)
Concrete, (Cement / Concrete), (4-11)
Conditions Requiring a Standard Manhole, (Design Criteria for Gravity Sewers), (2-5)
Connections to Manholes, (Manholes and Manhole Appurtenances), (2-9)
Connections for Pipes Forming the Flow Channel in Cast-in-Place Manhole Bases as Shown in Standard Drawing SD-7 and for Concrete Pipe Field Closures as Shown in Standard Drawing SD-33, (Manholes and Appurtenances), (4-9)
Construction Document Requirements, (2-22)
- Complete, Bound, Signed / Sealed Document Sets Required, (2-23)
- Data Sheet Required, (2-23)
- Drawing Requirements, (2-24)
- Final Document Submittals, (2-23)
- Full Civil Improvement Drawings Required, (2-23)

Construction Documents / Contract Documents, (Definitions), (1-4)
Construction Drawings, (Definitions), (1-4)
Construction Staking, (3-4)
Construction Standards, (3-1)
Contractor, (Definitions), (1-2)
Contractor's License, (3-1)
Contractor's Responsibility, (3-1)
Contractor Responsibility for Blasting, (Agency Pipeline Encroachment – Blasting), (3-7)
Control of Materials, (4-1)

Corrosion Protection, (Manholes and Manhole Appurtenances), (2-9)
Corrosion Protection Holiday Testing, (Initial Sanitary System Construction Acceptance (Initial Acceptance) of Pump Stations), (3-36)
Controlled Low Strength Material (CLSM), (Cement / Concrete), (4-10)
Corrosion Protection (as Required by Agency), (Manhole and Cast-in-Place Structure Installation), (3-23)
Curved Sewers, (Design Criteria for Gravity Sewers), (2-4)
Cut Sheets, (3-2)

Data Sheet Required, (Construction Document Requirements), (2-23)
Damage to Existing Sewers During Lateral Connection Installation, (Lateral Sewer Connections), (3-27)
Debris Trap, (Manhole and Cast-in-Place Structure Installation), (3-25)
Definitions, (1-2)
- Agency's Representative, (1-3)
- Construction Documents / Contract Documents, (1-4)
- Construction Drawings, (1-4)
- Contractor, (1-2)
- Design and Construction Standards, (1-4)
- Developer, (1-2)
- Director, (1-2)
- Engineer, (1-3)
- Equivalent Residential Unit (ERU), (1-3)
- Handheld Compaction Equipment, (1-4)
- Lateral, (1-4)
- Outlying Service Areas, (1-3)
- Participating Agency or Agency, (1-2)
- Private Collector Sewer, (1-3)
- Project, (1-4)
- Public Interceptor Sewer and Public Collector Sewer, (1-3)
- Pump Station / Lift Station, (1-5)
- Unpaved Area, (1-4)

Deflection Testing, (Initial Sanitary System Construction Acceptance (Initial Acceptance) of Gravity Sewers and Appurtenances), (3-33)
Deflection Testing, (Occupancy Permit Guidelines/Major Requirements), (3-39)
Density Failures, (Occupancy Permit Guidelines/Major Requirements), (3-39)
Depth, (Design Criteria for Force Mains), (2-29)
Design and Construction Standards, (Definitions), (1-4)
Design Criteria for Gravity Sewers, (2-1)
- Boring or Jacking Sewer Pipe, (2-21)
- Calculation of Peak Wastewater Flow, (2-1)
- Conditions Requiring a Standard Manhole, (2-5)
- Curved Sewers, (2-4)
- Drop Manholes, (2-11)
- Full Frontage Extension, (2-22)
- Lateral Connections Into Collector Sewers and Manholes, (2-15)
- Main Sewer Stub-Outs, (2-4)

- Manhole and Main Line Locations, (2-11)
- Manholes and Manhole Appurtenances, (2-7)
  - Additional Requirements for Manhole Bases, (2-7)
  - Additional Requirements for Large Multi-Family (Greater Than Four Units Per Building), Commercial and Industrial Laterals, (2-16)
  - Additional Requirements for Pre-Cast Concrete Grade Rings, (2-8)
  - Additional Requirements for Pre-Cast Concrete Section and Grade Ring Joints, (2-8)
  - Changes of Flow Direction Within Manholes, (2-7)
  - Connections to Manholes, (2-9)
  - Corrosion Protection, (2-9)
  - Frames and Covers, (2-8)
  - Odor Control Equipment, (2-10)
  - Pre-Cast Manhole Sections, (2-7)
  - Steps, (2-9)
- Manhole Diameters, (2-6)
- Maximum Distance Between Manholes, (2-5)
- Monitoring, Pretreatment Sampling, and Debris Screen Manholes, (2-11)
- Multiple Use of Sewer Trenches, (2-15)
- Other Utility Crossings and Clearances, Aerial Crossings, and Parallel Utility Installations, (2-17)
  - Aerial Crossings of Sanitary Sewers and Air Jumper Pipes, (2-18)
  - Below-Grade Utility Crossings and Clearances, (2-17)
  - Parallel Installation of Sanitary Sewers and Other Utilities, (2-18)
- Pipe Size Requirements, (2-1)
- Pipe Slope Requirements, (2-2)
- Sewer Line Depths and Alignments, (2-12)
- Sewer Main Connections, (2-14)
- Shallow Mains and Laterals, (2-14)
- Shallow Manholes, (2-10)
- Siphons, (2-19)
- Standard Manholes, (2-5)
- Water and Sewer Utility Crossings and Clearances, (2-16)

Design Criteria for Force Mains, (2-28)
- Aerial Crossings, (2-30)
- Air Relief Valves, (2-29)
- Depth, (2-29)
- Design Pressure, (2-30)
- Discharge Pipe, (2-29)
- Effluent Reuse Pipe Lines, (2-30)
- Flow Velocity Requirements, (2-28)
- Hydraulic Losses, (2-30)
- Slope, (2-29)
- Termination, (2-29)
- Thrust Blocks, (2-30)

Design Criteria for Pumping Stations, (2-28)
Design Pressure, (Design Criteria for Force Mains), (2-30)
Developer, (Definitions), (1-2)
Dewatering, (Earthwork), (3-11)
Director, (Definitions), (1-2)
Discharge Pipe, (Design Criteria for Force Mains), (2-29)
Discharge and Suction Line Valves, (Valves), (4-12)
Drawing Requirements, (Construction Document Requirements), (2-24)

Drop Manholes, (Design Criteria for Gravity Sewers), (2-11)
Ductile Iron Pipe (DIP) and Fittings, (Force Main Pipe and Fittings), (4-7)
Ductile Iron Pipe (DIP) and Fittings, (Gravity Sewer Pipe and Fittings for New Installations), (4-4)
Ductile Iron Pipe (DIP) and Fittings, (Gravity Sewer Pipe and Fittings for Modification of Existing Sewers), (4-6)
Duties of Agency's Representative, (Inspection), (1-8)

Earthwork, (3-9)
- Dewatering, (3-11)
- Excavation, (3-10)
- Pipe Bedding, (3-11)
  - Pipe Bedding (Flexible Pipe), (3-12)
  - Pipe Bedding (Rigid Pipe), (3-11)
- Pipe Zone Backfill, (3-13)
  - Pipe Zone Backfill (Flexible Pipe), (3-13)
  - Pipe Zone Backfill (Rigid Pipe), (3-13)
- Trench Backfill, (3-15)
  - Granular Backfill, (3-16)
  - Selected Backfill Material / Subdivisions, (3-16)
  - Trench Backfill (Paved Areas, Street R/W 60' or less) (See Standard Drawing No. SD-17),
  - Trench Backfill (Paved Areas, Street R/W Greater Than 60') (See Standard Drawing No. SD-18), (3-15)
  - Trench Backfill (Subdivision and Unpaved Areas) (See Standard Drawing No. SD-16), (3-15)
  - Trench Backfill Within State Right-of-Ways, (3-16)

Earthwork, Section 3.13, (Inspection Task Overview), (1-11)
Effluent Reuse Pipe Lines, (Design Criteria for Force Mains), (2-30)
Engineer, (Definitions), (1-3)
Equivalent Residential Unit (ERU), (Definitions), (1-3)
Excavation, (Earthwork), (3-10)
Excavation and Backfilling, (Manhole and Cast-in-Place Structure Installation), (3-23)
Existing Facility Inspection, (Agency Pipeline Encroachment – Blasting), (3-8)
Exterior Waterproofing, (Manhole and Cast-in-Place Structure Installation), (3-23)
Exterior Waterproofing for Pre-Cast and Cast-in-Place Concrete Structures, (Manholes and Appurtenances), (4-10)
Extra Strength Vitrified Clay Pipe (VCP), (Gravity Sewer Pipe and Fittings for Modification of Existing Sewers), (4-6)

Factory-Installed Corrosion Protection (Manhole Interior Corrosion Protection), (4-9)
Field-Installed Corrosion Protection, (Manhole Interior Corrosion Protection), (4-9)
Final Acceptance, (3-37)
- Final Acceptance Testing, (3-37)

Final Acceptance, (Inspection Task Overview), (1-16)
Final Acceptance Testing, (Final Acceptance) (3-37)
Final Document Submittals, (Construction Document Requirements), (2-23)
Final Manhole/Structure Adjustment, (Assembling Pre-Cast Concrete Manhole Components) (3-21)

Force Main Pipe and Fittings, (4-6)
Ductile Iron Pipe (DIP) and Fittings, (4-7)
High Density Polyethylene Pipe (HDPE) and Fittings, (4-7)
Polyvinyl Chloride Pipe and Fittings 2-inch Through 3-inch, (4-6)
Polyvinyl Chloride Plastic Pipe (PVC) and Fittings 4-inch Through 12-inch Nominal Diameter, (4-6)
Polyvinyl Chloride Plastic Pipe (PVC) and Fittings 14-inch Through 48-inch Nominal Diameter, (4-7)
Flow Velocity Requirements, (Design Criteria for Force Mains), (2-28)
Frame and Cover Installation, (Manhole and Cast-in-Place Structure Installation), (3-23)
Frames and Covers, (Manholes and Manhole Appurtenances), (2-8)
Full Civil Improvement Drawings Required, (Construction Document Requirements), (2-23)
Full Frontage Extension, (Design Criteria for Gravity Sewers), (2-22)

Gas Phase and Liquid Phase Odor Control Equipment, (Odor Control Equipment), (4-10)
General Information, (2-1)
General Statement, (1-1)
General, (Testing / Initial Sanitary System Construction Acceptance (Initial Acceptance) of Force Mains), (3-35)
Grade Lines, (3-3)
Grade Ring Joints, (Assembling Pre-Cast Concrete Manhole Components) (3-21)
Granular Backfill, (3-16)
Gravity Sewer Pipe and Fittings for New Installations, (4-2)
Ductile Iron Pipe (DIP) and Fittings, (4-4)
PVC Sewer Pipe and Fittings, (4-3)
Gravity Sewer Pipe and Fittings for Modification of Existing Sewers, (4-5)
Ductile Iron Pipe (DIP) and Fittings, (4-6)
Extra Strength Vitrified Clay Pipe (VCP), (4-6)
PVC Sewer Pipe and Fittings, (4-6)
Reinforced Concrete Pipe (RCP), (4-6)
Tapping Saddles for Lateral Connections to Existing Sanitary Sewers, (4-6)
Grout and Dry Packs, (4-12)
Grout for Final Adjustment of Manhole Grade Rings, (Manholes and Appurtenances), (4-9)
Grout for Sealing Pipe Connections, (Manholes and Appurtenances), (4-10)
Guarantee, (1-17)

Handheld Compaction Equipment, (Definitions), (1-4)
Handling Materials, (4-2)
High Density Polyethylene Pipe (HDPE) and Fittings, (Force Main Pipe and Fittings), (4-7)
Hydraulic Losses, (Design Criteria for Force Mains), (2-30)

Indemnity, (1-17)
Independent Blasting Consultant, (Agency Pipeline Encroachment – Blasting), (3-9)
Initial Acceptance, (Inspection Task Overview), (1-15)
Initial Sanitary System Construction Acceptance (Initial Acceptance) of Gravity Sewers and Appurtenances, (Testing), (3-31)
Initial Sanitary System Construction Acceptance (Initial Acceptance) of Force Mains, (Testing), (3-35)
Initial Sanitary System Construction Acceptance (Initial Acceptance) of Pump Stations, (Testing), (3-36)

Inspection, (1-8)
- Duties of Agency's Representative, (1-8)
- Inspection of Work, (1-9)
- Inspection Task Overview, (1-10)
  - Abandonment of Existing Facilities, Section 3.18, (1-14)
  - Earthwork, Section 3.13, (1-11)
  - Final Acceptance, (1-16)
  - Initial Acceptance, (1-15)
  - Job Start/Pre-Inspection, (1-10)
  - Lateral Sewer Connections, Section 3.17, (1-14)
  - Manhole Construction and Installation, Section 3.16, (1-13)
  - Pipe Installations, Section 3.14, (1-12)
  - Testing, Section 3.19, (1-14)
- Scheduling of Inspection, (1-10)

Inspection Task Overview, (Inspection), (1-10)
Inspection of Work, (Inspection), (1-9)

Job Start Check List, (3-2)
Job Start/Pre-Inspection, (Inspection Task Overview), (1-10)

Lateral, (Definitions), (1-4)
Lateral Connections Into Collector Sewers and Manholes, (Design Criteria for Gravity Sewers), (2-15)
Lateral Connections to Existing Sewers, (Lateral Sewer Connections), (3-26)
Lateral Connections to New Sewers, (Lateral Sewer Connections), (3-26)
Lateral Sewer Connections, (3-26)
- Damage to Existing Sewers During Lateral Connection Installation, (3-27)
- Lateral Connections to Existing Sewers, (3-26)
- Lateral Connections to New Sewers, (3-25)
- Tapping PVC and HDPE, (3-28)
- Tapping RCP, CIP, or DIP, (3-28)
- Tapping VCP, NRCP or ACP Mains, (3-27)

Lateral Sewer Connections, Section 3.17, (Inspection Task Overview), (1-14)
Lines Tested, (Occupancy Permit Guidelines/Major Requirements), (3-39)
Locations of Existing Utilities and Site Objects, (1-7)
Locator Ribbon for All Buried Sanitary System Pipes, (Pipe Locator Ribbon and Marker Balls), (4-11)
Low-Pressure Air Testing, (Initial Sanitary System Construction Acceptance (Initial Acceptance) of Gravity Sewers and Appurtenances), (3-31)

Major Requirements, (Occupancy Permit Guidelines), (3-39)
Main Lines and Laterals (Abandonment of Existing Facilities, (3-28)
Main Sewer Stub-Outs, (Design Criteria for Gravity Sewers), (2-4)
Manhole and Cast-in-Place Structure Installation, (3-19)
- Assembling Pre-Cast Concrete Manhole Components, (3-20)
  - Grade Ring Joints, (3-21)
  - Final Manhole/Structure Adjustment, (3-21)
  - Pre-Cast Manhole Sections, (3-21)
- Cast-in-Place Concrete Structures, (3-21)

- Corrosion Protection (as Required by Agency), (3-23)
  - Manhole and Cast-in-Place Structure Corrosion Protection – Field-Applied Coating Systems, (3-24)
  - Manhole Corrosion Protection – Factory-Installed PVC Lining Systems, (3-24)
- Debris Trap, (3-25)
- Excavation and Backfilling, (3-23)
- Exterior Waterproofing, (3-23)
- Frame and Cover Installation, (3-23)
- Manhole Base Construction, (3-20)
- Odor Control Equipment, (3-25)
- Pipe Connection Installation, (3-22)

Manhole Base Construction, (Manhole and Cast-in-Place Structure Installation), (3-20)
Manhole and Cast-in-Place Structure Corrosion Protection – Field-Applied Coating Systems, (Corrosion Protection (as Required by Agency), (3-24)
Manhole Construction and Installation, Section 3.16, (Inspection Task Overview), (1-13)
Manhole Corrosion Protection – Factory-Installed PVC Lining Systems, (Corrosion Protection (as Required by Agency), (3-24)
Manhole Diameters, (Design Criteria for Gravity Sewers), (2-6)
Manholes, (Abandonment of Existing Facilities), (3-30)
Manholes and Manhole Appurtenances, (2-7)
Manholes and Appurtenances, (4-8)

- Connections for Pipes Forming the Flow Channel in Cast-in-Place Manhole Bases as Shown in Standard Drawing SD-7 and for Concrete Pipe Field Closures as Shown in Standard Drawing SD-33, (4-9)
- Exterior Waterproofing for Pre-Cast and Cast-in-Place Concrete Structures, (4-10)
- Grout for Final Adjustment of Manhole Grade Rings, (4-9)
- Grout for Sealing Pipe Connections, (4-10)
- Manhole Frames and Covers, (4-8)
- Manhole Interior Corrosion Protection, (4-9)
  - Factory-Installed Corrosion Protection, (4-9)
  - Field-Installed Corrosion Protection, (4-9)
- Manhole Internal Tie-Down Lugs, (4-8)
- Manhole Section Joint Sealant, (4-9)
- Manhole Steps, (4-8)
- Pipe Connections for New and Existing Pre-Cast Manholes, (4-8)
- Pre-Cast Manhole Sections, (4-8)
- Styrofoam for Sanitary Sewer / Lateral Protection, (4-10)

Manhole and Main Line Locations, (Design Criteria for Gravity Sewers), (2-11)
Manhole Frames and Covers, (Manholes and Appurtenances), (4-8)
Manhole Grouting, (Occupancy Permit Guidelines/Minor Requirements), (3-40)
Manhole Interior Corrosion Protection, (Manholes and Appurtenances), (4-9)
Manhole Internal Tie-Down Lugs, (Manholes and Appurtenances), (4-8)
Manhole Section Joint Sealant, (Manholes and Appurtenances), (4-9)
Manhole Steps, (Manholes and Appurtenances), (4-8)
Manhole Visual Inspection and Corrosion Protection Holiday Testing, (Initial Sanitary System Construction Acceptance (Initial Acceptance) of Gravity Sewers and Appurtenances), (3-32)

Marker Balls for Curvilinear Sewers, Stub-Outs and Laterals, (Pipe Locator Ribbon and Marker), Balls (4-11)
Marker Balls for Force Mains and Reuse Lines, (Pipe Locator Ribbon and Marker Balls), (4-11)
Maximum Distance Between Manholes, (Design Criteria for Gravity Sewers), (2-5)
Metallic Locator Ribbon for Force Mains and Reuse Pipes, (Pipe Locator Ribbon and Marker Balls), (4-11)
Minor Requirements, (Occupancy Permit Guidelines), (3-40)
Monitoring, Pretreatment Sampling, and Debris Screen Manholes, (Design Criteria for Gravity Sewers), (2-11)
Multiple Use of Sewer Trenches, (Design Criteria for Gravity Sewers), (2-15)

Noise Attenuation, (Bypass Pumping), (3-5)

Occupancy Permit Guidelines, (3-38)
- Completion Guarantee in Emergency Situations, (3-40)
- Major Requirements, (3-39)
  - Cleaning Sewers, (3-39)
  - Deflection Testing, (3-39)
  - Density Failures, (3-39)
  - Lines Tested, (3-39)
  - Televising Sewers, (3-39)
- Minor Requirements, (3-40)
  - Adjusting Manholes, (3-40)
  - Manhole Grouting, (3-40)

Odor Control Equipment, (4-10)
- Gas Phase and Liquid Phase Odor Control Equipment, (4-10)
- Odor Control Manhole Inserts, (4-10)

Odor Control Equipment, (Manholes and Manhole Appurtenances), (2-10)
Odor Control Equipment, (Manhole and Cast-in-Place Structure Installation), (3-25)
Odor Control Manhole Inserts, (Odor Control Equipment), (4-10)
Odor Control Requirements, (Bypass Pumping), (3-6)
Other Utility Crossings and Clearances, Aerial Crossings, and Parallel Utility Installations, (2-17)
Outlying Service Areas, (Definitions), (1-3)

Paintings and Coatings, (4-12)
Parallel Installation of Sanitary Sewers and Other Utilities, (Other Utility Crossings and Clearances, Aerial Crossings, and Parallel Utility Installations), (2-18)
Participating Agency or Agency, (Definitions), (1-2)
Pipe Bedding, (Earthwork), (3-11)
Pipe Bedding (Flexible Pipe), (3-12)
Pipe Bedding (Rigid Pipe), (3-11)
Pipe Connection Installation, (Manhole and Cast-in-Place Structure Installation), (3-22)
Pipe Connections for New and Existing Pre-Cast Manholes, (Manholes and Appurtenances), (4-8)
Pipe Installation, (3-16)
Pipe Installations, Section 3.14, (Inspection Task Overview), (1-12)
Pipe Locator Ribbon and Marker Balls, (4-11)
- Locator Ribbon for All Buried Sanitary System Pipes, (4-11)
- Marker Balls for Curvilinear Sewers, Stub-Outs and Laterals, (4-11)
- Marker Balls for Force Mains and Reuse Lines, (4-11)
- Metallic Locator Ribbon for Force Mains and Reuse Pipes, (4-11)

Pipe Size Requirements, (Design Criteria for Gravity Sewers), (2-1)

Pipe Slope Requirements, (Design Criteria for Gravity Sewers), (2-2)
Pipe Zone Backfill, (Earthwork), (3-13)
Pipe Zone Backfill (Flexible Pipe), (3-13)
Pipe Zone Backfill (Rigid Pipe), (3-13)
Polyvinyl Chloride Pipe and Fittings 2-inch Through 3-inch, (Force Main Pipe and Fittings), (4-6)
Polyvinyl Chloride Plastic Pipe (PVC) and Fittings 4-inch Through 12-inch Nominal Diameter, (Force Main Pipe and Fittings), (4-6)
Polyvinyl Chloride Plastic Pipe (PVC) and Fittings 14-inch Through 48-inch Nominal Diameter, (Force Main Pipe and Fittings), (4-7)
Pre-Cast Manhole Sections, (Manholes and Manhole Appurtenances), (2-7)
Pre-Cast Manhole Sections, (Assembling Pre-Cast Concrete Manhole Components) (3-21)
Pre-Cast Manhole Sections, (Manholes and Appurtenances), (4-8)

Pretreatment Requirements, (1-18)
Private Collector Sewer, (Definitions), (1-3)
Procedure, (Initial Sanitary System Construction Acceptance (Initial Acceptance) of Force Mains), (3-35)
Prohibition Against Sanitary System Overflows, (Bypass Pumping), (3-5)
Project, (Definitions), (1-4)
Public Interceptor Sewer and Public Collector Sewer, (Definitions), (1-3)
Pump Station / Lift Station, (Definitions), (1-5)
Pumping Equipment, (Bypass Pumping), (3-5)
PVC Sewer Pipe and Fittings, (Gravity Sewer Pipe and Fittings for New Installations), (4-3)
PVC Sewer Pipe and Fittings, (Gravity Sewer Pipe and Fittings for Modification of Existing Sewers), (4-6)

Record Drawings, (3-4)
Reference to Standards and Publications, (1-5)
Reinforced Concrete Pipe (RCP), (Gravity Sewer Pipe and Fittings for Modification of Existing Sewers), (4-6)
Reinforcing Steel, (4-12)
Repairs, (Initial Sanitary System Construction Acceptance (Initial Acceptance) of Force Mains), (3-36)
Right-of-Ways and Easements, (1-6)
Right-of-Way Encroachments, (3-2)
Rules and Regulations, (1-18)

Scheduling of Inspection, (Inspection), (1-10)
Selected Backfill Material / Subdivisions, (3-16)
Sewer Cleaning, (Initial Sanitary System Construction Acceptance (Initial Acceptance) of Gravity Sewers and Appurtenances), (3-33)
Sewer Line Depths and Alignments, (Design Criteria for Gravity Sewers), (2-12)
Sewer Main Connections, (Design Criteria for Gravity Sewers), (2-14)
Sewer Televising, (Initial Sanitary System Construction Acceptance (Initial Acceptance) of Gravity Sewers and Appurtenances), (3-34)
Shallow Mains and Laterals, (Design Criteria for Gravity Sewers), (2-14)
Shallow Manholes, (Design Criteria for Gravity Sewers), (2-10)
Siphons, (Design Criteria for Gravity Sewers), (2-19)
Slope, (Design Criteria for Force Mains), (2-29)
Soil Testing, (3-19)
Source of Materials and Quality, (4-1)

INDEX TO DESIGN AND CONSTRUCTION STANDARDS

Standard Drawings, (**1-18**)

Above Grade Air Relief Valves, **SD-32**, (Section 5)
Approved Trap for Sewer Line Construction, **SD-30,** (Section 5)
Below Grade Air Relief Valves, **SD-31**, (Section 5)
Bollard Detail (Removable, Locking), **SD-38**, (Section 5)
Cast-in-Place Manhole Base Installed in Existing Sewer, **SD-7**, (Section 5)
Debris Screen, **SD-37**, (Section 5)
Deep Lateral Connection, **SD-27**, (Section 5)
Force Main Connections to Private Sewer Manhole, **SD-10**, (Section 5)
Force Main Connections to Public Sewer Manhole, **SD-11**, (Section 5)
Grade Ring Sequence, **SD-5**, (Section 5)
Lateral Cleanout, **SD-26**, (Section 5)
Lateral Connection to Sewer Main 12” Dia and Smaller, **SD-22**, (Section 5)
Lateral Connections to Sewer Mains 12” Dia and Smaller Around Obstructions, **SD-23**, (Section 5)
Lateral Connections to Sewer Mains 15” and Larger, **SD-24**, (Section 5)
Manhole Concrete Collar, **SD-4**, (Section 5)
Pipe Bedding Methods, **SD-14**, (Section 5)
Pipe Bedding, Haunch Support and Initial Cover, **SD-15**, (Section 5)
Pretreatment Sampling Manhole, **SD-34**, (Section 5)
Protection of Sanitary Sewer Under a Utility, **SD-21**, (Section 5)
Removal of Existing Manhole, **SD-8**, (Section 5)
Replacement of Existing Sanitary Sewer or Lateral Over New Utility, **SD-20,** (Section 5)
Residential Sewer Backwater Valve, **SD-29**, (Section 5)
Rigid Pipe Field Closure, **SD-33**, (Section 5)
Sewer Lateral Marker, **SD-25**, (Section 5)
Special Manholes-Agency Authorization Required, **SD-12**, (Section 5)
Special Shallow Manholes, **SD-13**, (Section 5)
Standard Concentric Dual Manhole Cover and Frame, **SD-2**, (Section 5)
Standard Eccentric Dual Manhole Cover and Frame, **SD-3**, (Section 5)
Standard Manhole Steps, **SD-6,** (Section 5)
Standard Pre-Cast Manhole, **SD-1A**, (Section 5)
Standard Pre-Cast Manhole, **SD-1B**, (Section 5)
Trench Section for Sewer Mains Within Subdivision and Unpaved Areas, **SD-16**, (Section 5)
Typical Flow Channel Details, **SD-9,** (Section 5)
Typical Force Main Clean-Out, **SD-36A**, (Section 5)
Typical Force Main Clean-Out, **SD-36B**, (Section 5)
Typical Sewer Easement Requiring Block Walls, **SD-28A**, (Section 5)
Typical Sewer Easements Requiring Block Walls, **SD-28B**, (Section 5)
Typical Siphon Inlet Structure, **SD-35B**, (Section 5)
Typical Siphon Outlet Structure, **SD-35A**, (Section 5)
Typical Trench Section Backfill for Paved Areas – Greater Than 60’ R/W, **SD-18**, (Section 5)
Typical Trench Section for Paved Areas – 60’ or Less R/W, **SD-17**, (Section 5)

Typical Underground Utility Locations in Street (Conform to RTC Standard 501, Latest Edition), **SD-19**, (Section 5)
Standard Manholes, (Design Criteria for Gravity Sewers), (2-5)
Standard Specifications, (3-1)
Start-up, (Initial Sanitary System Construction Acceptance (Initial Acceptance) of Pump Stations), (3-37)
Steps, (Manholes and Manhole Appurtenances), (2-9)
Storage of Materials, (4-1)
Styrofoam for Sanitary Sewer / Lateral Protection, (Manholes and Appurtenances), (4-10)

Tables
Backfill Materials, **Table H**, (T-9)
Compaction Testing, **Table I**, (T-11)
Data Sheet for Plan Approval, **Table E**, (T-5)
Easement Widths, **Table A**, (T-1)
Force Main Allowable Leakage, **Table K**, (T-13)
General Notes for Drawings, **Table F**, (T-6)
Inspection Charge Statement of Authorization and Responsibility, **Table B**, (T-2)
Lift Station Data Sheet, **Table G**, (T-8)
Low Pressure Air Test for Gravity Sewer Lines, **Table J**, (T-12)
Minimum Required and Maximum Permitted Pipe Slopes, **Table D**, (T-4)
Ratio of Peak Flow to Average Daily Flow, Clark County Nevada, **Table C**, (T-3)
Tapping PVC and HDPE, (Lateral Sewer Connections), (3-28)
Tapping RCP, CIP, or DIP, (Lateral Sewer Connections), (3-28)
Tapping Saddles for Lateral Connections to Existing Sanitary Sewers, (Gravity Sewer Pipe and Fittings for Modification of Existing Sewers), (4-6)
Tapping VCP, NRCP or ACP Mains, (Lateral Sewer Connections), (3-27)
Televising Sewers, (Occupancy Permit Guidelines/Major Requirements), (3-40)
Termination, (Design Criteria for Force Mains), (2-29)
Test Pressure, (Initial Sanitary System Construction Acceptance (Initial Acceptance) of Force Mains), (3-35)
Testing, (3-31)
Initial Sanitary System Construction Acceptance (Initial Acceptance) of Force Mains, (3-34)
Allowable Leakage, (3-36)
Backfill Procedure After Test, (3-36)
General, (3-35)
Procedure, (3-35)
Repairs, (3-36)
Test Pressure, (3-35)
Initial Sanitary System Construction Acceptance (Initial Acceptance) of Gravity Sewers and Appurtenances, (3-31)
Deflection Testing, (3-33)
Low-Pressure Air Testing, (3-31)
Manhole Visual Inspection and Corrosion Protection Holiday Testing, (3-32)
Sewer Cleaning, (3-33)
Sewer Televising, (3-34)
Initial Sanitary System Construction Acceptance (Initial Acceptance) of Pump Stations, (3-36)
Corrosion Protection Holiday Testing, (3-36)
Start-up, (3-37)

Testing, Section 3.19, (Inspection Task Overview), (1-14)
Thrust Blocks, (Design Criteria for Force Mains), (2-30)
Time Limitation, (1-18)
Trench Backfill, (Earthwork), (3-15)
Trench Backfill (Paved Areas, Street R/W 60' or less) (See Standard Drawing No. SD-17), (3-15)
Trench Backfill (Paved Areas, Street R/W Greater Than 60') (See Standard Drawing No. SD-18), (3-15)
Trench Backfill (Subdivision and Unpaved Areas) (See Standard Drawing No. SD-16), (3-15)
Trench Backfill Within State Right-of-Ways, (3-16)

Unacceptable Materials, (4-2)
Unpaved Area, (Definitions), (1-4)
Use of New Sanitary Sewers, (Bypass Pumping), (3-5)

Valves, (4-12)
    Air-Vacuum and Air-Release Valves, (4-12)
    Check Valves, (4-12)
    Discharge and Suction Line Valves, (4-12)
Violations, (1-17)

Water and Sewer Utility Crossings and Clearances, (Design Criteria for Gravity Sewers), (2-16)
Working Hours, (1-8)

THIS PAGE LEFT BLANK INTENTIONALLY